Product Catalog: Husqvarna/M-ZT 61 (Endurance Comm.)

ENGINE MOUNTING, GUARDS AND MUFFLER

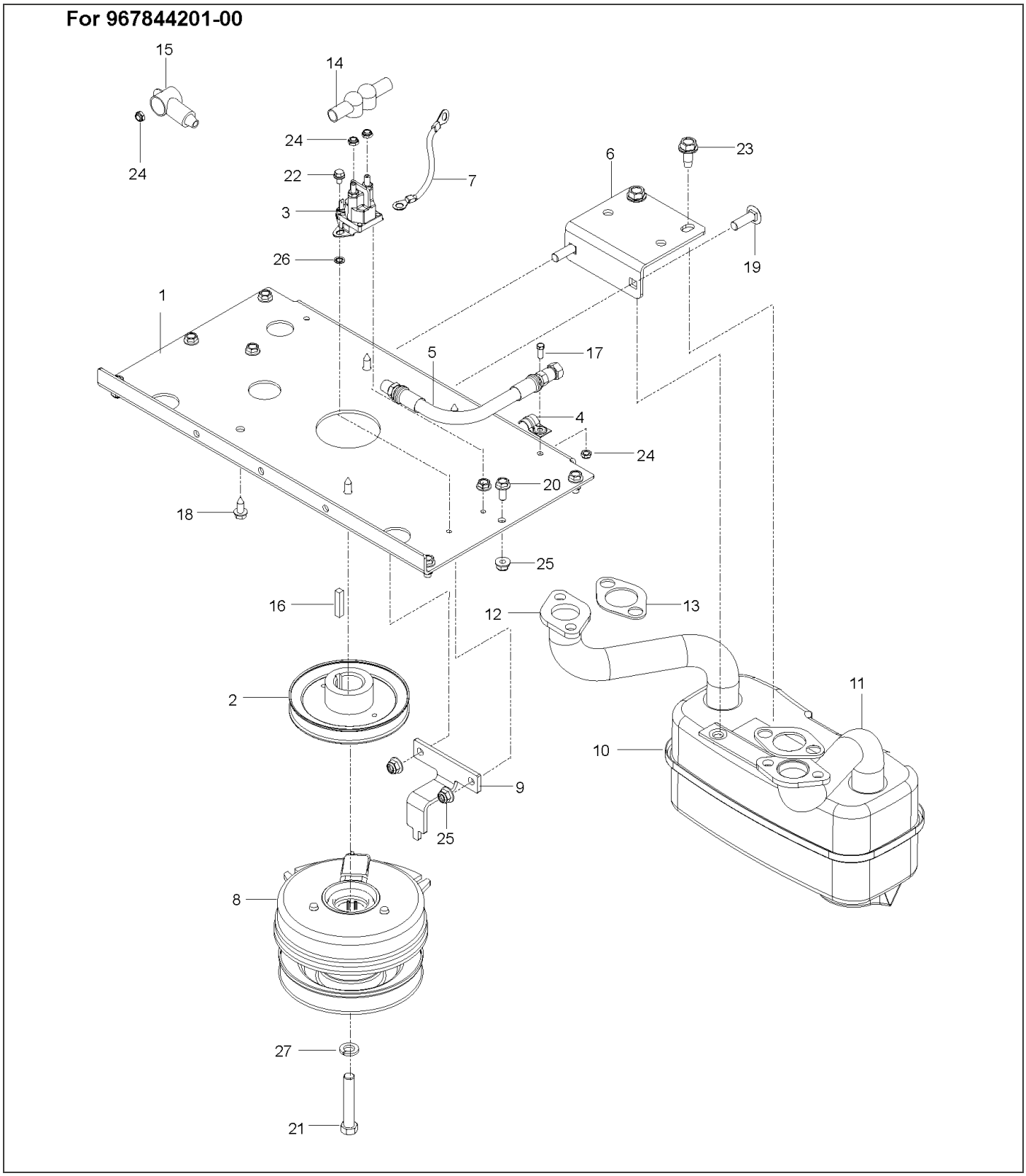

Ref.	Article N.	Description	Qty	Kit
1	586651402	PLATE -	1	-
2	574811001	PULLEY -	1	-
3	582042801	SOLENOID -	1	-
4	539101363	CLAMP -	1	-
5	584825501	HOSE ASSY -	1	-
6	575229902	BRACKET -	1	-
7	539102757	CABLE -	1	-
8	574607001	CLUTCH -	1	-
9	575017301	STOP -	1	-
10	539131604	MUFFLER ASSY -	1	-
11	583954501	TUBE -	1	-
12	583954801	TUBE -	1	-
13	586839701	GASKET -	2	-
14	532131563	COVER -	2	-
15	539102759	INSULATOR -	1	-
16	539912757	KEY -	1	-
17	539990071	BOLT -	1	-
18	817120616	SCREW -	4	-
19	539107271	SCREW -	2	-
20	874490512	BOLT -	8	-
21	581332802	BOLT -	1	-
22	539990302	HWST 1/4C X 3/8	1	-

Ref.	Article N.	Description	Qty	Kit
		-		
23	539107475	BOLT -	2	-
24	539108120	NUT -	4	-
25	539112899	NUT, 5/16-18, NYLOC -	10	-
26	539990053	WASHER -	1	-
27	539990247	WASHER -	1	-
1	586651402	PLATE	1	-
2	574846402	PLATE *For 967177008-01*	1	-
2	586670402	PLATE *For 967177007-01, 967045501-00*	1	-
3	574811001	PULLEY	1	-
4	539976688	PULLEY	1	-
5	532175820	PULLEY	1	-
6	574870901	DRIVE BELT	1	-
7	525435601	PIVOT	1	-
8	510206301	PIVOT	1	-
9	510041603	ARM	1	-
10	574607001	CLUTCH	1	-
11	575017302	STOP	1	-
12	539102757	CABLE *For 967177007-01, 967177008-01*	1	-
13	576701801	MUFFLER *For 967177007-01*	1	-
13	525750201	MUFFLER *For 967177008-01*	1	-
13	501451201	MUFFLER ASSY *For 967045501-00*	1	-
14	582042801	SOLENOID *For 967177007-01, 967177008-01*	1	-
15	510254401	SPRING	1	-
16	539114662	SHIELD, DUST	1	-
17	510254501	SHIELD	2	-
18	579150901	SHIELD *For 967177007-01, 967177008-01*	1	-

Ref.	Article N.	Description	Qty	Kit
19	584825501	HOSE ASSY *For 967177008-01, 967045501-00*	1	-
20	522599001	ADAPTER *For 967177008-01*	1	-
21	539101363	CLAMP *For 967177008-01, 967045501-00*	1	-
22	522837001	PLUG *For 967177008-01*	1	-
22	585807101	PLUG *For 967045501-00*	1	-
23	539912757	KEY	1	-
24	586839701	GASKET *For 967177007-01, 967177008-01*	2	-
25	532131563	COVER *For 967177007-01*	1	-
25	539102759	INSULATOR *For 967177008-01*	2	-
26	532131563	COVER *For 967177007-01*	2	-
27	539104763	CLIP	4	-
28	539100413	BOLT *For 967177007-01*	1	-
28	872140610	BOLT *For 967177008-01, 967045501-00*	1	-
29	872140622	BOLT *For 967045501-00*	1	-
29	539130235	RHSNB 3/8-16 X 2.75 GR5 ZD *For 967177007-01, 967177008-01*	1	-
30	872110508	BOLT *For 967177008-01*	2	-
31	581332802	BOLT	1	-
32	539103433	SCREW *For 967177007-01*	1	-
32	874780852	BOLT *For 967177008-01, 967045501-00*	1	-
33	525866201	BOLT *For 967177007-01*	1	-
33	874490632	SCREW *For 967177008-01, 967045501-00*	1	-
34	874490512	BOLT	11	-
35	874780408	BOLT *For 967045501-00*	1	-

Ref.	Article N.	Description	Qty	Kit
35	539990071	BOLT *For 967177008-01*	1	-
36	817120616	SCREW *For 967177007-01, 967045501-00*	4	-
36	539990563	SCREW *For 967177008-01*	4	-
37	592858702	BOLT	8	-
38	817490406	SCREW *For 967177008-01*	1	-
38	539990302	HWST 1/4C X 3/8 *For 967177007-01*	1	-
39	539990613	NUT *For 967177007-01*	1	-
40	539112899	NUT, 5/16-18, NYLOC	15	-
41	521991101	NUT	1	-
42	539200282	NUT	4	-
43	521996501	NUT *For 967177008-01, 967045501-00*	2	-
44	539108120	NUT *For 967177007-01, 967177008-01*	4	-
45	539990053	WASHER	1	-
46	539115528	1/2` CONTACT BELLSPR	1	-
47	539990247	WASHER	1	-
48	539109562	WASHER	1	-
50	539109554	WASHER *For 967177007-01*	2	-
50	819182212	WASHER *For 967177008-01, 967045501-00*	2	-
51	539111897	WASHER	1	-
52	819141614	WASHER	1	-
53	539990118	WASHER *For 967177008-01, 967045501-00*	4	-
54	539990613	NUT *For 967177007-01*	1	-
54	521996501	NUT *For 967177008-01, 967045501-00*	2	-
55	532183906	SCREW *For 967177007-01*	4	-
55	532192334	SCREW *For 967045501-00*	4	-
91	501279301	HARNESS *For 967045501-00*	1	-

Ref.	Article N.	Description	Qty	Kit
92	586839901	GASKET *For 967045501-00, NOT SHOWN*	2	-
93	587450101	HARNESS *For 967045501-00*	1	-
94	574825801	KIT *For 967045501-00, SPARK ARRESTOR*	1	-
1	501656001	FRAME -	1	-
2	586893002	GUARD -	1	-
3	586867702	SUPPORT -	1	-
4	586560101	BRACKET -	1	-
5	586560201	BRACKET -	1	-
6	539132744	PLATE -	1	-
7	539132380	PLATE -	1	-
8	594037402	BRACKET *For all EXCEPT 967844201-00, BLK*	1	-
8	587048702	BRACKET *For 967844201-00*	1	-
9	575245202	BRACKET -	2	-
10	575533602	MOUNT -	2	-
11	900000002	DUMMY PART *For all EXCEPT 967844201-00, 593 79 55-05 Guard, Skid Gray*	1	-
11	575230402	SHIELD *For 967844201-00*	1	-
12	539132859	HEAT SHIELD -	1	-
13	587990501	CAP -	2	-
14	593634302	STOP *For all EXCEPT 967844201-00*	2	-
14	505256401	STOP *For 967844201-00*	2	-
15	539102587	ABSORBER -	7	-
16	539105974	GROMMET	1	-

Ref.	Article N.	Description	Qty	Kit
		-		
17	522801401	BUMPER *For 967844201-00*	2	-
17	874490644	BOLT *For 967844201-00*	2	-
18	539104411	KNOB -	1	-
19	539200715	PIN *For 967844201-00*	2	-
19	874490512	BOLT *For 967844201-00*	1	-
20	539133006	BOLT *For 967844201-00*	2	-
20	574388001	PIN *For 967844201-00*	2	-
21	539104763	CLIP *For 967844201-00*	5	-
22	539133006	BOLT *For 967844201-00*	2	-
22	525544001	BOLT *For 967844201-00*	1	-
23	874490644	BOLT *For 967844201-00*	2	-
23	539102335	BOLT *For 967844201-00*	2	-
24	874490512	BOLT *For 967844201-00*	18	-
24	539109117	BOLT *For all EXCEPT 967844201-00*	2	-
25	872140508	BOLT *For all EXCEPT 967844201-00*	3	-
25	874490560	BOLT *For 967844201-00*	4	-
26	525544001	BOLT *For 967844201-00*	1	-
26	872110606	BOLT *For all EXCEPT 967844201-00*	6	-
27	539102335	BOLT *For 967844201-00*	2	-
27	539200282	NUT *For 967844201-00*	6	-
28	874490560	BOLT *For 967844201-00*	4	-

Ref.	Article N.	Description	Qty	Kit
28	580754601	BOLT *For 967844201-00*	6	-
29	872140506	BOLT *For 967844201-00*	6	-
29	521996501	NUT *For all EXCEPT 967844201-00*	2	-
30	539990208	SCREW *For 967844201-00*	3	-
30	539112899	NUT, 5/16-18, NYLOC *For all EXCEPT 967844201-00*	12	-
31	539990645	BOLT -	2	-
32	539990316	BOLT *For 967844201-00*	4	-
32	819111116	WASHER *For all EXCEPT 967844201-00*	2	-
33	539200282	NUT *For 967844201-00*	6	-
33	539990250	WASHER *For all EXCEPT 967844201-00*	1	-
34	521996501	NUT *For all EXCEPT 967844201-00*	2	-
35	539112899	NUT, 5/16-18, NYLOC *For all EXCEPT 967844201-00*	13	-
36	525829101	NUT -	6	-
37	539976978	NUT *For 967844201-00*	2	-
37	873800400	NUT *For all EXCEPT 967844201-00*	4	-
38	819111116	WASHER *For all EXCEPT 967844201-00*	2	-
39	539990250	WASHER *For all EXCEPT 967844201-00*	1	-
40	819132416	WASHER -	2	-
41	539102653	WASHER *For 967844201-00*	4	-
42	539104763	CLIP *For 967844201-00*	8	-
43	539102653	WASHER *For 967844201-00*	4	-
62	575274801	KIT	1	-

Ref.	Article N.	Description	Qty	Kit
		For 967844201-00, NOT SHOWN PROTECTION FRAME		
1	586670402	PLATE	1	-
2	539976688	PULLEY	1	-
3	532175820	PULLEY	1	-
4	510041603	ARM	1	-
5	574870901	DRIVE BELT	1	-
6	584994202	SHIELD	2	-
7	539102587	ABSORBER	2	-
8	510206301	PIVOT	1	-
9	525435601	PIVOT	1	-
10	539104763	CLIP	4	-
11	510254501	SHIELD	2	-
12	539114662	SHIELD, DUST	1	-
13	510254401	SPRING	1	-
14	872140610	BOLT	1	-
15	539130235	RHSNB 3/8-16 X 2.75 GR5 ZD	1	-
16	874490632	SCREW	1	-
17	874490512	BOLT	3	-
18	592858702	BOLT	9	-
19	874780852	BOLT	1	-
20	521991101	NUT	1	-
21	521996501	NUT	2	-
22	539112899	NUT, 5/16-18, NYLOC	5	-
23	539200282	NUT	4	-
24	539990613	NUT	1	-
25	539115528	1/2` CONTACT BELLSPR	1	-
26	819182212	WASHER	2	-
27	819141614	WASHER	1	-
28	539109562	WASHER	1	-
31	539111897	WASHER	1	-
1	574569101	TRANSMISSION *LEFT*	1	-
2	574569102	TRANSMISSION *RIGHT*	1	-
3	593278902	BRACKET *For 967177008-01, 967045501-00, 967844201-00*	1	-
3	575017102	BRACKET *For 967177007-01*	1	-
4	593279002	BRACKET *For 967177008-01, 967045501-00, 967844201-00*	1	-

Ref.	Article N.	Description	Qty	Kit
4	575017002	BRACKET *For 967177007-01*	1	-
5	539131616	LINKAGE. LEFT BYPASS	1	-
6	539131618	LINKAGE	1	-
7	574892101	HOSE ASSY	2	-
8	586067501	HOSE	1	-
9	585318201	TANK	1	-
10	584994202	SHIELD	2	-
11	539113466	OIL FILTER	2	-
12	530095646	FUEL FILTER	1	-
13	586072701	CAP	1	-
14	539976988	PIN	2	-
15	539102587	ABSORBER	2	-
16	539976988	PIN	2	-
17	539990643	BOLT	1	-
18	592858702	BOLT	9	-
19	539101721	SCREW *For 967177007-01*	4	-
19	539976978	NUT *For 967177008-01, 967045501-00, 967844201-00*	4	-
20	539112899	NUT, 5/16-18, NYLOC	2	-
21	574233801	SCREW	4	-
22	539990118	WASHER	4	-
23	539112899	NUT, 5/16-18, NYLOC	8	-
24	596204101	WASHER	2	-
25	539990118	WASHER	2	-
26	539990187	WASHER	4	-
27	539990055	WASHER	4	-
28	539990122	WASHER	2	-
1	585722303	FUEL TANK ASSY	1	-
2	539107593	CONSOLE	1	-
3	539102436	BATTERY	1	-
4	588107201	BRACKET *For 967045501-00, 967844201-00*	1	-
4	593634404	BRACKET *For 967177008-01*	1	-
4	510030001	BRACKET *For 967177007-01*	1	-
5	588030801	CABLE	1	-
6	588030701	CABLE	1	-

Ref.	Article N.	Description	Qty	Kit
7	574841204	PLATE *For 967177007-01, 967045501-00, 967844201-00*	1	-
7	592877402	PLATE *For 967177008-01*	1	-
8	582107602	SWITCH *For 967177007-01, 967177008-01, 967844201-00*	1	-
8	539131627	SWITCH *For 967045501-00*	1	-
9	574455401	SWITCH	1	-
10	581878301	LIGHT *For 967045501-00*	1	-
10	584971801	CHOKE *For 967844201-00*	1	-
10	574206903	CABLE *For 967177007-01, 967177008-01*	1	-
11	539102732	THROTTLE *For 967045501-00, 967844201-00*	1	-
11	539112438	THROTTLE CABLE *For 967177007-01, 967177008-01*	1	-
12	539133049	KNOB	1	-
13	586123901	FUEL HOSE *For 967177007-01, 967045501-00*	1	-
13	586123903	FUEL HOSE *For 967177008-01, 967844201-00*	1	-
14	576469201	FITTING	1	-
15	575018101	CAP	1	-
16	576618101	TANK VENT	1	-
17	539916325	VALVE *For 967844201-00*	1	-
18	576618201	GROMMET	1	-
19	539105245	GROMMET	1	-
20	539103178	NUT CAP	1	-
21	575436501	CLAMP	2	-
22	532123487	HOSE CLAMP *For 967844201-00*	4	-
23	587044810	HOSE *For 967844201-00*	2	-
24	587044539	HOSE *For 967045501-00*	1	-
24	587044536	HOSE *For 967177008-01, CUT TO LENGTH*	1	-
24	587044555	HOSE	1	-

Ref.	Article N.	Description	Qty	Kit
		For 967844201-00		
24	587044564	HOSE *For 967177007-01, CUT TO FIT*	1	-
25	574455501	KEY	1	-
26	586161801	HOUR METER	1	-
28	582484201	SCREW	6	-
29	588843202	SUPPORT *For 967177008-01, 967844201-00*	2	-
29	539131671	SUPPORT *For 967177007-01, 967045501-00*	2	-
30	510064001	HOOK	2	-
31	532435395	TERMINAL COVER	1	-
32	539976934	SCREW *For 967177008-01, 967844201-00*	2	-
32	874780512	SCREW *For 967177007-01, 967045501-00*	2	-
33	872140506	BOLT *For 967177007-01, 967045501-00*	2	-
33	539990316	BOLT *For 967177008-01, 967844201-00*	2	-
34	539990411	SCREW *For 967045501-00, 967844201-00*	6	-
34	817490516	SCREW *For 967045501-00, 967844201-00*	3	-
35	539990411	SCREW *For 967045501-00, 967844201-00*	6	-
35	817490516	SCREW *For 967045501-00, 967844201-00*	3	-
36	539976977	NUT	2	-
37	539990997	NUT	2	-
38	539112899	NUT, 5/16-18, NYLOC	13	-
39	819070818	WASHER	4	-
40	819111116	WASHER	2	-
41	539990187	WASHER	2	-
42	532197802	SWITCH *For 967177008-01, 967177007-01*	1	-
42	539113792	SWITCH *For 967045501-00*	1	-
43	532109553	SWITCH *For 967177007-01, 967177008-01, 967045501-00*	2	-
44	581223001	PLATE *For 967177007-01, 967177008-01, 967045501-00*	2	-

Ref.	Article N.	Description	Qty	Kit
45	574822701	SCREW *For 967177007-01, 967177008-01, 967045501-00*	4	-
63	589669901	HARNESS *For 967177007-01, 967844201-00*	1	-
64	532409615	HARNESS *For 967177007-01, 967844201-00*	1	-
65	501279301	HARNESS *For 967045501-00*	1	-
66	900000002	DUMMY PART *For 967177008-01, 589 66 99-02 Harness w/Brake Switch*	1	-
1	581505401	DECK -	1	-
2	539104335	DRIVE BELT -	1	-
3	539113312	BLADE -	3	-
4	539131898	SPINDLE -	3	-
5	539103427	BUSHING -	1	-
6	539112169	BLADE BUSHING -	2	-
7	589766101	PULLEY -	3	-
8	539113300	PULLEY -	3	-
9	539112198	ARM -	1	-
10	539113319	SHIELD -	1	-
11	539113322	SHIELD -	1	-
12	584859402	BRACKET -	2	-
13	584859404	BRACKET -	2	-
14	539130901	CHUTE -	1	-
15	539113317	PLATE -	1	-
16	585323901	BEARING *For 967177008-01, 967045501-00*	3	-
16	532110485	BEARING	3	-

Ref.	Article N.	Description	Qty	Kit
		For 967177007-01, 967844201-00		
17	539103256	SPRING -	1	-
18	581606106	BRACKET *For 967844201-00*	1	-
18	581606102	BRACKET *For 967177007-01, 967177008-01, 967045501-00, ORG*	1	-
19	539130917	BRACKET -	1	-
20	532176066	ROLLER -	1	-
21	532179127	PIN -	1	-
22	539131859	PIN -	2	-
23	532133957	WHEEL -	2	-
24	539976998	NIPPLE -	1	-
25	876020412	SPLIT PIN -	2	-
26	581606102	BRACKET *For 967177007-01, 967177008-01, 967045501-00, ORG*	1	-
26	592964402	BRACKET *For 967177007-01, 967177008-01, 967045501-00*	1	-
27	532187291	SHAFT -	3	-
28	539104763	CLIP *For 967844201-00*	8	-
28	874780648	BOLT *For 967177007-01, 967177008-01, 967045501-00*	2	-
29	539108396	BOLT -	2	-
30	539990563	SCREW -	2	-
31	539976934	SCREW -	8	-
32	539990582	SCREW -	1	-
33	539103433	SCREW *For 967177007-01, 967844201-00*	1	-
33	589343201	MANDREL *For 967177008-01, 967045501-00*	1	-

Ref.	Article N.	Description	Qty	Kit
34	874780520	BOLT -	2	-
35	539990799	BOLT -	3	-
36	872110508	BOLT *For 967177007-01*	2	-
36	539107271	SCREW *For 967177008-01, 967045501-00, 967844201-00*	2	-
37	539100472	SCREW -	2	-
38	539102933	SCREW -	2	-
39	532193003	SCREW -	3	-
40	532137644	SCREW -	2	-
41	584953901	BOLT -	12	-
42	874780648	BOLT *For 967177007-01, 967177008-01, 967045501-00*	2	-
42	532400234	NUT *For 967177007-01, 967177008-01, 967045501-00*	3	-
43	539990717	NUT -	3	-
44	539990196	NUT -	2	-
45	539976979	NUT -	6	-
46	539101331	NUT *For 967177007-01*	1	-
46	873800800	NUT *For 967177008-01, 967045501-00, 967844201-00*	1	-
47	539112899	NUT, 5/16-18, NYLOC -	8	-
48	596134801	HEXAGON NUT -	3	-
49	539106504	WASHER -	2	-
50	819121414	WASHER *For 967844201-00*	10	-
50	539990692	WASHER *For 967177007-01, 967177008-01, 967045501-00*	11	-
51	539109600	WASHER	8	-

Ref.	Article N.	Description	Qty	Kit
		-		
52	539102243	WASHER -	1	-
53	539990550	WASHER *For 967177007-01*	1	-
53	819182212	WASHER *For 967177008-01, 967045501-00, 967844201-00*	1	-
54	532187690	WASHER -	3	-
55	819141614	WASHER -	3	-
1	510408301	PEDAL -	1	-
2	539110808	CROSS LINK -	2	-
3	586701701	SPACER -	2	-
4	539131861	SPACER. .3 -	1	-
5	586928702	LIFT -	1	-
6	584392702	PLATE -	2	-
7	539131897	BELLCRANK -	1	-
8	539131853	BELLCRANK -	1	-
9	588812102	BRACKET -	1	-
10	588812002	BRACKET -	1	-
11	539131566	LATCH -	1	-
12	539105059	ROPE -	1	-
13	539131791	MOUNT -	1	-
14	532195161	STUD -	4	-
15	539131792	SPRING -	1	-
16	539112896	BOLT -	1	-

Ref.	Article N.	Description	Qty	Kit
17	539102642	SPRING -	1	-
18	539132734	SPRING. TORSION -	1	-
19	539131850	HEIGHT. ADJUST. DECK -	1	-
20	539131860	PIVOT. LATCH. TRANSPORT -	1	-
21	539104808	SUPPORT -	4	-
22	539132182	PIN -	1	-
23	539132851	GRIP -	1	-
24	539115501	COTTER -	4	-
25	532194209	SPRING -	2	-
26	874780648	BOLT -	1	-
27	539990646	BOLT -	1	-
28	874780544	BOLT -	4	-
29	539108181	HCS 1/2-13 X 1-3/4 GR 8 ZD -	2	-
30	539990563	SCREW -	4	-
31	539112899	NUT, 5/16-18, NYLOC -	5	-
32	539976979	NUT -	4	-
33	873800800	NUT -	2	-
34	873900500	NUT -	2	-
35	539200282	NUT -	2	-
36	873900600	NUT -	4	-
37	819141614	WASHER -	1	-
38	539115528	1/2` CONTACT BELLSPR	1	-

Ref.	Article N.	Description	Qty	Kit
		-		
39	539109554	WASHER -	2	-
40	819191912	WASHER -	2	-
41	539991043	BUSHING -	10	-
1	510408301	PEDAL -	1	-
2	539110808	CROSS LINK -	2	-
3	586701701	SPACER -	2	-
4	539131861	SPACER. .3 -	1	-
5	586928702	LIFT -	1	-
6	584392702	PLATE -	2	-
7	539131897	BELLCRANK -	1	-
8	539131853	BELLCRANK -	1	-
9	539112223	STRUT -	2	-
10	539109693	LIFT CHAIN - 3 LINK -	4	-
11	539131566	LATCH -	1	-
12	539105059	ROPE -	1	-
13	539991043	BUSHING *For 967177007-01*	10	-
13	819211616	WASHER *For 967177008-01, 967045501-00*	1	-
14	539132017	MOUNT -	2	-
15	532194209	SPRING *For 967177008-01, 967045501-00*	1	-
16	539112896	BOLT -	1	-
17	539102642	SPRING *For 967177007-01*	1	-

Ref.	Article N.	Description	Qty	Kit
17	539131790	SPRING *For 967177008-01, 967045501-00*	1	-
18	539132734	SPRING. TORSION -	1	-
19	539131850	HEIGHT. ADJUST. DECK -	1	-
20	539131860	PIVOT. LATCH. TRANSPORT -	1	-
21	539104808	SUPPORT -	4	-
22	539132182	PIN -	1	-
24	539132851	GRIP -	1	-
25	539115501	COTTER -	6	-
26	874780544	BOLT *For 967177008-01, 967045501-00*	4	-
26	539101721	SCREW *For 967177007-01*	4	-
27	539108181	HCS 1/2-13 X 1-3/4 GR 8 ZD -	2	-
28	539976941	SCREW -	4	-
29	539101175	SCREW -	4	-
30	874780648	BOLT -	1	-
31	539990646	BOLT -	1	-
32	539108073	BOLT -	4	-
33	539200282	NUT -	2	-
34	539132019	NUT -	8	-
35	539102582	NUT -	8	-
36	539112899	NUT, 5/16-18, NYLOC *For 967177007-01*	5	-
37	539976979	NUT -	4	-
38	539101331	NUT	1	-

Ref.	Article N.	Description	Qty	Kit
		For 967177007-01		
38	873800800	NUT *For 967177008-01, 967045501-00*	1	-
39	819141614	WASHER -	1	-
40	539115528	1/2` CONTACT BELLSPR -	2	-
41	539109554	WASHER *For 967177007-01*	2	-
41	819182212	WASHER *For 967177008-01, 967045501-00*	2	-
42	539112899	NUT, 5/16-18, NYLOC *For 967177007-01*	5	-
43	539131791	MOUNT *For 967177007-01*	1	-
44	539131792	SPRING *For 967177007-01*	1	-
1	539132151	ARM -	1	-
2	539105036	GRIP -	1	-
3	575229602	BRACKET -	1	-
4	575229702	BRACKET -	1	-
5	586738802	LEVER -	1	-
6	575230201	SPRING -	2	-
7	575230301	SPRING -	2	-
8	586830002	MOUNT -	1	-
9	539132154	ACTUATOR -	1	-
10	539132153	BELLCRANK -	2	-
11	539132424	LINKAGE. BRAKE -	1	-
12	575229802	BRACKET -	2	-
13	539132161	BLADE BUSHING -	4	-

Ref.	Article N.	Description	Qty	Kit
14	539104763	CLIP -	3	-
15	582121801	CABLE ASSY -	1	-
16	582122001	CABLE ASSY -	2	-
17	505280001	TIE WRAP -	2	-
18	539990643	BOLT -	4	-
19	539108396	BOLT -	1	-
20	539990563	SCREW -	2	-
21	539990209	SCREW -	1	-
22	539110303	BOLT -	2	-
23	539990645	BOLT -	2	-
24	539990316	BOLT -	1	-
25	539131780	BOLT -	1	-
26	874490512	BOLT -	1	-
27	539112899	NUT, 5/16-18, NYLOC -	2	-
28	539990585	NUT -	5	-
29	539990717	NUT -	1	-
30	521996501	NUT -	2	-
31	539115617	NUT -	2	-
32	539200282	NUT -	2	-
33	539976978	NUT -	4	-
34	539107897	NUT -	2	-
35	539990055	WASHER	8	-

Ref.	Article N.	Description	Qty	Kit
		-		
36	539133007	WASHER -	1	-
37	539990122	WASHER -	2	-
38	819182212	WASHER -	1	-
39	532197802	SWITCH -	1	-
1	593564002	ARM -	1	-
2	539105036	GRIP -	1	-
3	593279202	BRACKET -	1	-
4	593279902	BRACKET -	1	-
5	590337701	GEAR -	1	-
6	575230201	SPRING -	2	-
7	575230301	SPRING -	2	-
8	590631502	MOUNT -	1	-
9	590204501	GEAR -	1	-
10	539990196	NUT -	2	-
11	596018303	BRACKET -	6	-
12	539104763	CLIP -	3	-
13	582121801	CABLE ASSY -	1	-
14	582122001	CABLE ASSY -	1	-
15	582121801	CABLE ASSY -	2	-
16	582122001	CABLE ASSY -	1	-
17	596018303	BRACKET -	1	-

Ref.	Article N.	Description	Qty	Kit
18	593239802	ACTUATOR -	1	-
19	539990643	BOLT -	4	-
20	539108396	BOLT -	1	-
21	525544001	BOLT -	3	-
22	539110303	BOLT -	2	-
23	539990645	BOLT -	2	-
24	539990316	BOLT -	1	-
25	539131780	BOLT -	1	-
26	874490512	BOLT -	1	-
27	525544001	BOLT -	1	-
28	539112899	NUT, 5/16-18, NYLOC -	1	-
29	539990585	NUT -	2	-
30	539990717	NUT -	1	-
31	521996501	NUT -	2	-
32	539115617	NUT -	2	-
33	539200282	NUT -	3	-
34	539976978	NUT -	4	-
35	539107897	NUT -	2	-
36	539990196	NUT -	2	-
37	539990055	WASHER -	8	-
38	819182212	WASHER -	1	-
39	539990122	WASHER	2	-

Ref.	Article N.	Description	Qty	Kit
		-		
40	819182212	WASHER -	1	-
41	595846701	BRAKE ASSY *NOT SHOWN*	1	-
1	501580402	SEAT -	1	-
2	539130359	BELT -	1	-
3	539103247	WIRE -	1	-
4	501762102	SUPPORT -	1	-
5	584916802	MOUNT -	2	-
6	587613301	SPRING -	2	-
7	539104763	CLIP -	8	-
8	539130793	STOP -	1	-
9	539119741	SWITCH -	1	-
10	584809102	SUPPORT -	1	-
11	584990102	SUPPORT -	1	-
12	584990202	SUPPORT -	1	-
13	539105974	GROMMET -	1	-
14	874490512	BOLT -	2	-
15	525544001	BOLT -	4	-
16	874490560	BOLT -	2	-
17	539990645	BOLT -	3	-
18	539115620	1/4-20X3/4 CARR BLT -	1	-
19	539130896	BOLT -	2	-

Ref.	Article N.	Description	Qty	Kit
20	539112034	BOLT *For 967844201-00*	2	-
20	539124775	SCREW *For 967177007-01, 967177008-01, 967045501-00*	2	-
21	872050506	BOLT *For 967844201-00*	2	-
22	539112899	NUT, 5/16-18, NYLOC -	9	-
23	539976979	NUT -	2	-
24	539990394	NUT -	2	-
25	539976978	NUT -	1	-
26	819141614	WASHER *For 967177007-01, 967177008-01, 967045501-00*	4	-
26	819091216	WASHER *For 967177007-01, 967177008-01, 967045501-00*	1	-
27	819141614	WASHER *For 967177007-01, 967177008-01, 967045501-00*	4	-
27	819091216	WASHER *For 967177007-01, 967177008-01, 967045501-00*	1	-
28	521996501	NUT *For 967177007-01, 967177008-01, 967045501-00*	1	-
29	873800500	LOCK NUT *For 967177007-01, 967177008-01, 967045501-00*	1	-
1	590090803	TUBE	1	-
2	590090804	TUBE	1	-
3	532109553	SWITCH	2	-
4	585124705	BRACKET	2	-
5	539438282	BEARING *For 967177007-01, 967177008-01, 967045501-00*	4	-
5	532438282	BEARING UNIT *For 967844201-00*	4	-
6	587187701	CONTROL	2	-
7	577420001	LEVER	2	-
8	584927201	SPACER	2	-
9	539102720	GAS SPRING	2	-
10	581437501	BLOCK	2	-
11	539102845	SPRING	2	-
12	576850301	SPRING	1	-
13	539131799	KNOB	1	-

Ref.	Article N.	Description	Qty	Kit
14	574811401	ROD	2	-
15	539116689	ROD END COUPLER	2	-
16	588692502	ROD	2	-
17	579764601	JOINT	2	-
18	581223001	PLATE *For 967844201-00*	2	-
19	576850402	SCREW *For 967177007-01, 967177008-01, 967045501-00*	2	-
19	539990585	NUT *For 967177007-01, 967177008-01, 967045501-00*	4	-
20	574822701	SCREW *For 967844201-00*	4	-
21	874780844	BOLT *For 967177007-01, 967177008-01, 967045501-00*	2	-
21	596580801	BOLT *NOTE: If you order 596580801 you will need to also order key 30 532423063 in the same quantity.*	1	-
22	874780844	BOLT *For 967177007-01, 967177008-01, 967045501-00*	2	-
22	539976935	SCREW *For 967177007-01, 967177008-01, 967045501-00*	4	-
23	539976935	SCREW *For 967177007-01, 967177008-01, 967045501-00*	4	-
23	525544001	BOLT *For 967177007-01, 967177008-01, 967045501-00*	4	-
24	525544001	BOLT *For 967177007-01, 967177008-01, 967045501-00*	4	-
24	874490512	BOLT *For 967177007-01, 967177008-01, 967045501-00*	8	-
25	576850402	SCREW *For 967177007-01, 967177008-01, 967045501-00*	2	-
25	874490512	BOLT *For 967177007-01, 967177008-01, 967045501-00*	8	-
26	539991073	NUT	2	-
27	539990585	NUT *For 967177007-01, 967177008-01, 967045501-00*	4	-
28	539990717	NUT *For 967177007-01, 967177008-01, 967045501-00*	6	-
28	539108010	NUT *For 967177007-01, 967177008-01, 967045501-00*	2	-
29	539990717	NUT *For 967177007-01, 967177008-01, 967045501-00*	4	-

Ref.	Article N.	Description	Qty	Kit
29	539112899	NUT, 5/16-18, NYLOC *For 967177007-01, 967177008-01, 967045501-00*	10	-
30	819111116	WASHER *For 967177007-01, 967177008-01, 967045501-00*	12	-
30	532423063	WASHER *NOTE: If you order 532423063 you will need to also order key 30 596580801 in the same quantity.*	1	-
31	539990223	NUT	4	-
32	819111116	WASHER *For 967177007-01, 967177008-01, 967045501-00*	14	-
33	539130894	GRIP *For 967177007-01, 967177008-01, 967045501-00*	2	-
34	874780520	BOLT *For 967177007-01, 967177008-01, 967045501-00*	5	-
35	539108010	NUT *For 967177007-01, 967177008-01, 967045501-00*	2	-
36	595305701	SCREW	2	-
1	586955401	WHEEL ASSY -	2	-
2	581199501	WHEEL ASSY -	2	-
3	582746401	TIRE -	2	-
3	539102543	BEARING -	4	-
4	539102535	CAP -	2	-
5	586921902	FORK -	2	-
6	539102851	SEALING -	2	-
7	575334901	SPACER -	2	-
8	539101474	NIPPLE -	2	-
9	539102889	SPLIT PIN -	2	-
10	539105517	BOLT -	2	-
11	539102852	NUT -	2	-
12	521991101	NUT -	2	-

Ref.	Article N.	Description	Qty	Kit
13	587653902	NUT -	8	-
14	819182212	WASHER -	2	-

ENGINE MOUNTING, GUARDS AND MUFFLER

For 967177007-01, 967177008-01, 967045501-00

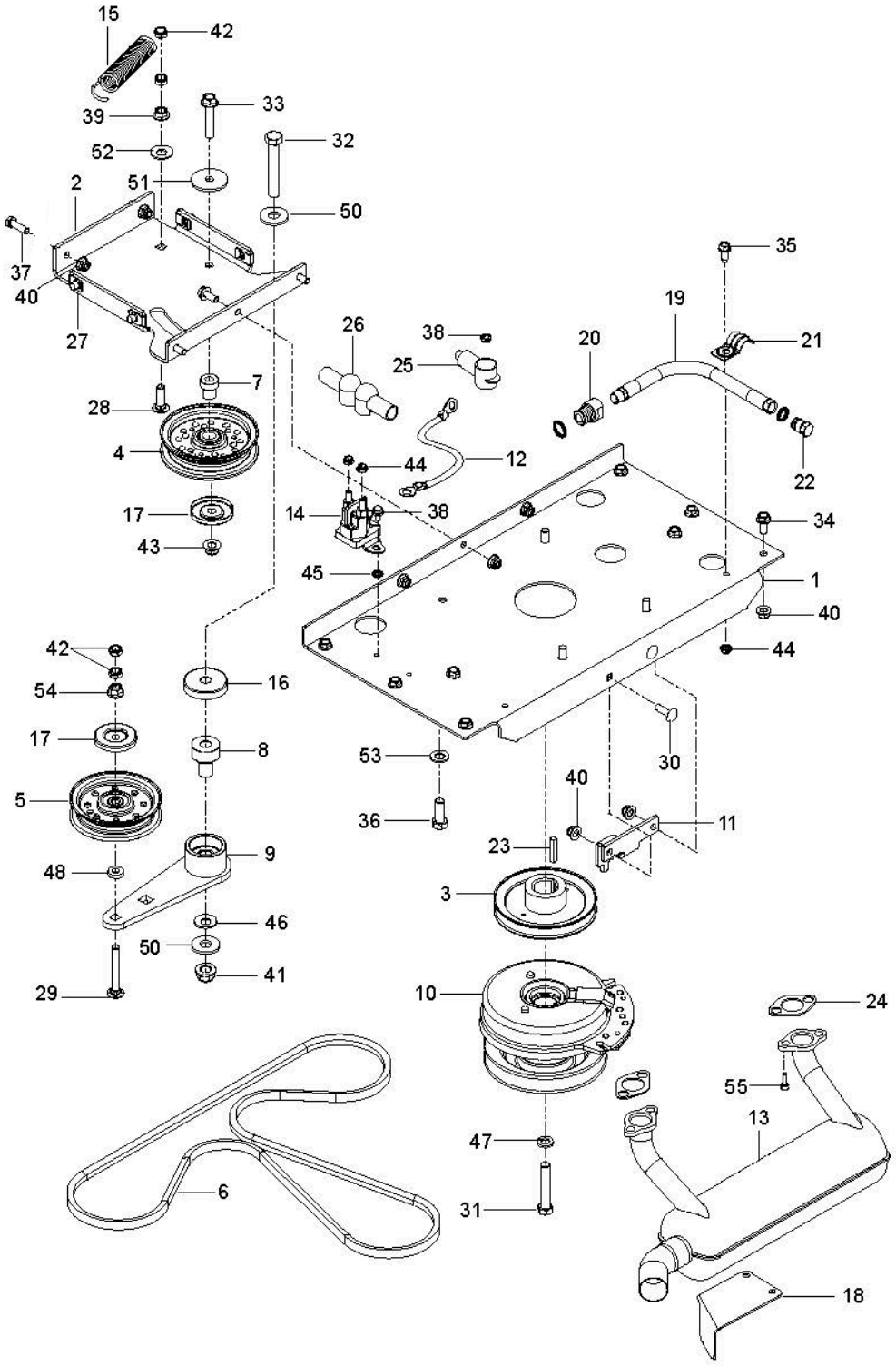

Ref.	Article N.	Description	Qty	Kit
1	586651402	PLATE -	1	-
2	574811001	PULLEY -	1	-
3	582042801	SOLENOID -	1	-

Ref.	Article N.	Description	Qty	Kit
4	539101363	CLAMP -	1	-
5	584825501	HOSE ASSY -	1	-
6	575229902	BRACKET -	1	-
7	539102757	CABLE -	1	-
8	574607001	CLUTCH -	1	-
9	575017301	STOP -	1	-
10	539131604	MUFFLER ASSY -	1	-
11	583954501	TUBE -	1	-
12	583954801	TUBE -	1	-
13	586839701	GASKET -	2	-
14	532131563	COVER -	2	-
15	539102759	INSULATOR -	1	-
16	539912757	KEY -	1	-
17	539990071	BOLT -	1	-
18	817120616	SCREW -	4	-
19	539107271	SCREW -	2	-
20	874490512	BOLT -	8	-
21	581332802	BOLT -	1	-
22	539990302	HWST 1/4C X 3/8 -	1	-
23	539107475	BOLT -	2	-
24	539108120	NUT -	4	-
25	539112899	NUT, 5/16-18, NYLOC	10	-

Ref.	Article N.	Description	Qty	Kit
		-		
26	539990053	WASHER -	1	-
27	539990247	WASHER -	1	-
1	586651402	PLATE	1	-
2	574846402	PLATE *For 967177008-01*	1	-
2	586670402	PLATE *For 967177007-01, 967045501-00*	1	-
3	574811001	PULLEY	1	-
4	539976688	PULLEY	1	-
5	532175820	PULLEY	1	-
6	574870901	DRIVE BELT	1	-
7	525435601	PIVOT	1	-
8	510206301	PIVOT	1	-
9	510041603	ARM	1	-
10	574607001	CLUTCH	1	-
11	575017302	STOP	1	-
12	539102757	CABLE *For 967177007-01, 967177008-01*	1	-
13	576701801	MUFFLER *For 967177007-01*	1	-
13	525750201	MUFFLER *For 967177008-01*	1	-
13	501451201	MUFFLER ASSY *For 967045501-00*	1	-
14	582042801	SOLENOID *For 967177007-01, 967177008-01*	1	-
15	510254401	SPRING	1	-
16	539114662	SHIELD, DUST	1	-
17	510254501	SHIELD	2	-
18	579150901	SHIELD *For 967177007-01, 967177008-01*	1	-
19	584825501	HOSE ASSY *For 967177008-01, 967045501-00*	1	-
20	522599001	ADAPTER *For 967177008-01*	1	-
21	539101363	CLAMP *For 967177008-01, 967045501-00*	1	-

Ref.	Article N.	Description	Qty	Kit
22	522837001	PLUG *For 967177008-01*	1	-
22	585807101	PLUG *For 967045501-00*	1	-
23	539912757	KEY	1	-
24	586839701	GASKET *For 967177007-01, 967177008-01*	2	-
25	532131563	COVER *For 967177007-01*	1	-
25	539102759	INSULATOR *For 967177008-01*	2	-
26	532131563	COVER *For 967177007-01*	2	-
27	539104763	CLIP	4	-
28	539100413	BOLT *For 967177007-01*	1	-
28	872140610	BOLT *For 967177008-01, 967045501-00*	1	-
29	872140622	BOLT *For 967045501-00*	1	-
29	539130235	RHSNB 3/8-16 X 2.75 GR5 ZD *For 967177007-01, 967177008-01*	1	-
30	872110508	BOLT *For 967177008-01*	2	-
31	581332802	BOLT	1	-
32	539103433	SCREW *For 967177007-01*	1	-
32	874780852	BOLT *For 967177008-01, 967045501-00*	1	-
33	525866201	BOLT *For 967177007-01*	1	-
33	874490632	SCREW *For 967177008-01, 967045501-00*	1	-
34	874490512	BOLT	11	-
35	874780408	BOLT *For 967045501-00*	1	-
35	539990071	BOLT *For 967177008-01*	1	-
36	817120616	SCREW *For 967177007-01, 967045501-00*	4	-
36	539990563	SCREW *For 967177008-01*	4	-

Ref.	Article N.	Description	Qty	Kit
37	592858702	BOLT	8	-
38	817490406	SCREW *For 967177008-01*	1	-
38	539990302	HWST 1/4C X 3/8 *For 967177007-01*	1	-
39	539990613	NUT *For 967177007-01*	1	-
40	539112899	NUT, 5/16-18, NYLOC	15	-
41	521991101	NUT	1	-
42	539200282	NUT	4	-
43	521996501	NUT *For 967177008-01, 967045501-00*	2	-
44	539108120	NUT *For 967177007-01, 967177008-01*	4	-
45	539990053	WASHER	1	-
46	539115528	1/2` CONTACT BELLSPR	1	-
47	539990247	WASHER	1	-
48	539109562	WASHER	1	-
50	539109554	WASHER *For 967177007-01*	2	-
50	819182212	WASHER *For 967177008-01, 967045501-00*	2	-
51	539111897	WASHER	1	-
52	819141614	WASHER	1	-
53	539990118	WASHER *For 967177008-01, 967045501-00*	4	-
54	539990613	NUT *For 967177007-01*	1	-
54	521996501	NUT *For 967177008-01, 967045501-00*	2	-
55	532183906	SCREW *For 967177007-01*	4	-
55	532192334	SCREW *For 967045501-00*	4	-
91	501279301	HARNESS *For 967045501-00*	1	-
92	586839901	GASKET *For 967045501-00, NOT SHOWN*	2	-
93	587450101	HARNESS *For 967045501-00*	1	-
94	574825801	KIT *For 967045501-00, SPARK ARRESTOR*	1	-

Ref.	Article N.	Description	Qty	Kit
1	501656001	FRAME -	1	-
2	586893002	GUARD -	1	-
3	586867702	SUPPORT -	1	-
4	586560101	BRACKET -	1	-
5	586560201	BRACKET -	1	-
6	539132744	PLATE -	1	-
7	539132380	PLATE -	1	-
8	594037402	BRACKET *For all EXCEPT 967844201-00, BLK*	1	-
8	587048702	BRACKET *For 967844201-00*	1	-
9	575245202	BRACKET -	2	-
10	575533602	MOUNT -	2	-
11	900000002	DUMMY PART *For all EXCEPT 967844201-00, 593 79 55-05 Guard, Skid Gray*	1	-
11	575230402	SHIELD *For 967844201-00*	1	-
12	539132859	HEAT SHIELD -	1	-
13	587990501	CAP -	2	-
14	593634302	STOP *For all EXCEPT 967844201-00*	2	-
14	505256401	STOP *For 967844201-00*	2	-
15	539102587	ABSORBER -	7	-
16	539105974	GROMMET -	1	-
17	522801401	BUMPER *For 967844201-00*	2	-
17	874490644	BOLT *For 967844201-00*	2	-
18	539104411	KNOB	1	-

Ref.	Article N.	Description	Qty	Kit
		-		
19	539200715	PIN *For 967844201-00*	2	-
19	874490512	BOLT *For 967844201-00*	1	-
20	539133006	BOLT *For 967844201-00*	2	-
20	574388001	PIN *For 967844201-00*	2	-
21	539104763	CLIP *For 967844201-00*	5	-
22	539133006	BOLT *For 967844201-00*	2	-
22	525544001	BOLT *For 967844201-00*	1	-
23	874490644	BOLT *For 967844201-00*	2	-
23	539102335	BOLT *For 967844201-00*	2	-
24	874490512	BOLT *For 967844201-00*	18	-
24	539109117	BOLT *For all EXCEPT 967844201-00*	2	-
25	872140508	BOLT *For all EXCEPT 967844201-00*	3	-
25	874490560	BOLT *For 967844201-00*	4	-
26	525544001	BOLT *For 967844201-00*	1	-
26	872110606	BOLT *For all EXCEPT 967844201-00*	6	-
27	539102335	BOLT *For 967844201-00*	2	-
27	539200282	NUT *For 967844201-00*	6	-
28	874490560	BOLT *For 967844201-00*	4	-
28	580754601	BOLT *For 967844201-00*	6	-
29	872140506	BOLT *For 967844201-00*	6	-
29	521996501	NUT *For all EXCEPT 967844201-00*	2	-

Ref.	Article N.	Description	Qty	Kit
30	539990208	SCREW *For 967844201-00*	3	-
30	539112899	NUT, 5/16-18, NYLOC *For all EXCEPT 967844201-00*	12	-
31	539990645	BOLT -	2	-
32	539990316	BOLT *For 967844201-00*	4	-
32	819111116	WASHER *For all EXCEPT 967844201-00*	2	-
33	539200282	NUT *For 967844201-00*	6	-
33	539990250	WASHER *For all EXCEPT 967844201-00*	1	-
34	521996501	NUT *For all EXCEPT 967844201-00*	2	-
35	539112899	NUT, 5/16-18, NYLOC *For all EXCEPT 967844201-00*	13	-
36	525829101	NUT -	6	-
37	539976978	NUT *For 967844201-00*	2	-
37	873800400	NUT *For all EXCEPT 967844201-00*	4	-
38	819111116	WASHER *For all EXCEPT 967844201-00*	2	-
39	539990250	WASHER *For all EXCEPT 967844201-00*	1	-
40	819132416	WASHER -	2	-
41	539102653	WASHER *For 967844201-00*	4	-
42	539104763	CLIP *For 967844201-00*	8	-
43	539102653	WASHER *For 967844201-00*	4	-
62	575274801	KIT *For 967844201-00, NOT SHOWN PROTECTION FRAME*	1	-
1	586670402	PLATE	1	-
2	539976688	PULLEY	1	-
3	532175820	PULLEY	1	-
4	510041603	ARM	1	-

Ref.	Article N.	Description	Qty	Kit
5	574870901	DRIVE BELT	1	-
6	584994202	SHIELD	2	-
7	539102587	ABSORBER	2	-
8	510206301	PIVOT	1	-
9	525435601	PIVOT	1	-
10	539104763	CLIP	4	-
11	510254501	SHIELD	2	-
12	539114662	SHIELD, DUST	1	-
13	510254401	SPRING	1	-
14	872140610	BOLT	1	-
15	539130235	RHSNB 3/8-16 X 2.75 GR5 ZD	1	-
16	874490632	SCREW	1	-
17	874490512	BOLT	3	-
18	592858702	BOLT	9	-
19	874780852	BOLT	1	-
20	521991101	NUT	1	-
21	521996501	NUT	2	-
22	539112899	NUT, 5/16-18, NYLOC	5	-
23	539200282	NUT	4	-
24	539990613	NUT	1	-
25	539115528	1/2` CONTACT BELLSPR	1	-
26	819182212	WASHER	2	-
27	819141614	WASHER	1	-
28	539109562	WASHER	1	-
31	539111897	WASHER	1	-
1	574569101	TRANSMISSION *LEFT*	1	-
2	574569102	TRANSMISSION *RIGHT*	1	-
3	593278902	BRACKET *For 967177008-01, 967045501-00, 967844201-00*	1	-
3	575017102	BRACKET *For 967177007-01*	1	-
4	593279002	BRACKET *For 967177008-01, 967045501-00, 967844201-00*	1	-
4	575017002	BRACKET *For 967177007-01*	1	-
5	539131616	LINKAGE. LEFT BYPASS	1	-
6	539131618	LINKAGE	1	-
7	574892101	HOSE ASSY	2	-

Ref.	Article N.	Description	Qty	Kit
8	586067501	HOSE	1	-
9	585318201	TANK	1	-
10	584994202	SHIELD	2	-
11	539113466	OIL FILTER	2	-
12	530095646	FUEL FILTER	1	-
13	586072701	CAP	1	-
14	539976988	PIN	2	-
15	539102587	ABSORBER	2	-
16	539976988	PIN	2	-
17	539990643	BOLT	1	-
18	592858702	BOLT	9	-
19	539101721	SCREW *For 967177007-01*	4	-
19	539976978	NUT *For 967177008-01, 967045501-00, 967844201-00*	4	-
20	539112899	NUT, 5/16-18, NYLOC	2	-
21	574233801	SCREW	4	-
22	539990118	WASHER	4	-
23	539112899	NUT, 5/16-18, NYLOC	8	-
24	596204101	WASHER	2	-
25	539990118	WASHER	2	-
26	539990187	WASHER	4	-
27	539990055	WASHER	4	-
28	539990122	WASHER	2	-
1	585722303	FUEL TANK ASSY	1	-
2	539107593	CONSOLE	1	-
3	539102436	BATTERY	1	-
4	588107201	BRACKET *For 967045501-00, 967844201-00*	1	-
4	593634404	BRACKET *For 967177008-01*	1	-
4	510030001	BRACKET *For 967177007-01*	1	-
5	588030801	CABLE	1	-
6	588030701	CABLE	1	-
7	574841204	PLATE *For 967177007-01, 967045501-00, 967844201-00*	1	-
7	592877402	PLATE *For 967177008-01*	1	-
8	582107602	SWITCH	1	-

Ref.	Article N.	Description	Qty	Kit
		For 967177007-01, 967177008-01, 967844201-00		
8	539131627	SWITCH *For 967045501-00*	1	-
9	574455401	SWITCH	1	-
10	581878301	LIGHT *For 967045501-00*	1	-
10	584971801	CHOKE *For 967844201-00*	1	-
10	574206903	CABLE *For 967177007-01, 967177008-01*	1	-
11	539102732	THROTTLE *For 967045501-00, 967844201-00*	1	-
11	539112438	THROTTLE CABLE *For 967177007-01, 967177008-01*	1	-
12	539133049	KNOB	1	-
13	586123901	FUEL HOSE *For 967177007-01, 967045501-00*	1	-
13	586123903	FUEL HOSE *For 967177008-01, 967844201-00*	1	-
14	576469201	FITTING	1	-
15	575018101	CAP	1	-
16	576618101	TANK VENT	1	-
17	539916325	VALVE *For 967844201-00*	1	-
18	576618201	GROMMET	1	-
19	539105245	GROMMET	1	-
20	539103178	NUT CAP	1	-
21	575436501	CLAMP	2	-
22	532123487	HOSE CLAMP *For 967844201-00*	4	-
23	587044810	HOSE *For 967844201-00*	2	-
24	587044539	HOSE *For 967045501-00*	1	-
24	587044536	HOSE *For 967177008-01, CUT TO LENGTH*	1	-
24	587044555	HOSE *For 967844201-00*	1	-
24	587044564	HOSE *For 967177007-01, CUT TO FIT*	1	-
25	574455501	KEY	1	-
26	586161801	HOUR METER	1	-

Ref.	Article N.	Description	Qty	Kit
28	582484201	SCREW	6	-
29	588843202	SUPPORT *For 967177008-01, 967844201-00*	2	-
29	539131671	SUPPORT *For 967177007-01, 967045501-00*	2	-
30	510064001	HOOK	2	-
31	532435395	TERMINAL COVER	1	-
32	539976934	SCREW *For 967177008-01, 967844201-00*	2	-
32	874780512	SCREW *For 967177007-01, 967045501-00*	2	-
33	872140506	BOLT *For 967177007-01, 967045501-00*	2	-
33	539990316	BOLT *For 967177008-01, 967844201-00*	2	-
34	539990411	SCREW *For 967045501-00, 967844201-00*	6	-
34	817490516	SCREW *For 967045501-00, 967844201-00*	3	-
35	539990411	SCREW *For 967045501-00, 967844201-00*	6	-
35	817490516	SCREW *For 967045501-00, 967844201-00*	3	-
36	539976977	NUT	2	-
37	539990997	NUT	2	-
38	539112899	NUT, 5/16-18, NYLOC	13	-
39	819070818	WASHER	4	-
40	819111116	WASHER	2	-
41	539990187	WASHER	2	-
42	532197802	SWITCH *For 967177008-01, 967177007-01*	1	-
42	539113792	SWITCH *For 967045501-00*	1	-
43	532109553	SWITCH *For 967177007-01, 967177008-01, 967045501-00*	2	-
44	581223001	PLATE *For 967177007-01, 967177008-01, 967045501-00*	2	-
45	574822701	SCREW *For 967177007-01, 967177008-01, 967045501-00*	4	-
63	589669901	HARNESS *For 967177007-01, 967844201-00*	1	-
64	532409615	HARNESS	1	-

Ref.	Article N.	Description	Qty	Kit
		For 967177007-01, 967844201-00		
65	501279301	HARNESS *For 967045501-00*	1	-
66	900000002	DUMMY PART *For 967177008-01, 589 66 99-02 Harness w/Brake Switch*	1	-
1	581505401	DECK -	1	-
2	539104335	DRIVE BELT -	1	-
3	539113312	BLADE -	3	-
4	539131898	SPINDLE -	3	-
5	539103427	BUSHING -	1	-
6	539112169	BLADE BUSHING -	2	-
7	589766101	PULLEY -	3	-
8	539113300	PULLEY -	3	-
9	539112198	ARM -	1	-
10	539113319	SHIELD -	1	-
11	539113322	SHIELD -	1	-
12	584859402	BRACKET -	2	-
13	584859404	BRACKET -	2	-
14	539130901	CHUTE -	1	-
15	539113317	PLATE -	1	-
16	585323901	BEARING *For 967177008-01, 967045501-00*	3	-
16	532110485	BEARING *For 967177007-01, 967844201-00*	3	-
17	539103256	SPRING -	1	-
18	581606106	BRACKET *For 967844201-00*	1	-

Ref.	Article N.	Description	Qty	Kit
18	581606102	BRACKET *For 967177007-01, 967177008-01, 967045501-00, ORG*	1	-
19	539130917	BRACKET -	1	-
20	532176066	ROLLER -	1	-
21	532179127	PIN -	1	-
22	539131859	PIN -	2	-
23	532133957	WHEEL -	2	-
24	539976998	NIPPLE -	1	-
25	876020412	SPLIT PIN -	2	-
26	581606102	BRACKET *For 967177007-01, 967177008-01, 967045501-00, ORG*	1	-
26	592964402	BRACKET *For 967177007-01, 967177008-01, 967045501-00*	1	-
27	532187291	SHAFT -	3	-
28	539104763	CLIP *For 967844201-00*	8	-
28	874780648	BOLT *For 967177007-01, 967177008-01, 967045501-00*	2	-
29	539108396	BOLT -	2	-
30	539990563	SCREW -	2	-
31	539976934	SCREW -	8	-
32	539990582	SCREW -	1	-
33	539103433	SCREW *For 967177007-01, 967844201-00*	1	-
33	589343201	MANDREL *For 967177008-01, 967045501-00*	1	-
34	874780520	BOLT -	2	-
35	539990799	BOLT -	3	-
36	872110508	BOLT	2	-

Ref.	Article N.	Description	Qty	Kit
		For 967177007-01		
36	539107271	SCREW *For 967177008-01, 967045501-00, 967844201-00*	2	-
37	539100472	SCREW -	2	-
38	539102933	SCREW -	2	-
39	532193003	SCREW -	3	-
40	532137644	SCREW -	2	-
41	584953901	BOLT -	12	-
42	874780648	BOLT *For 967177007-01, 967177008-01, 967045501-00*	2	-
42	532400234	NUT *For 967177007-01, 967177008-01, 967045501-00*	3	-
43	539990717	NUT -	3	-
44	539990196	NUT -	2	-
45	539976979	NUT -	6	-
46	539101331	NUT *For 967177007-01*	1	-
46	873800800	NUT *For 967177008-01, 967045501-00, 967844201-00*	1	-
47	539112899	NUT, 5/16-18, NYLOC -	8	-
48	596134801	HEXAGON NUT -	3	-
49	539106504	WASHER -	2	-
50	819121414	WASHER *For 967844201-00*	10	-
50	539990692	WASHER *For 967177007-01, 967177008-01, 967045501-00*	11	-
51	539109600	WASHER -	8	-
52	539102243	WASHER -	1	-
53	539990550	WASHER *For 967177007-01*	1	-

Ref.	Article N.	Description	Qty	Kit
53	819182212	WASHER *For 967177008-01, 967045501-00, 967844201-00*	1	-
54	532187690	WASHER -	3	-
55	819141614	WASHER -	3	-
1	510408301	PEDAL -	1	-
2	539110808	CROSS LINK -	2	-
3	586701701	SPACER -	2	-
4	539131861	SPACER. .3 -	1	-
5	586928702	LIFT -	1	-
6	584392702	PLATE -	2	-
7	539131897	BELLCRANK -	1	-
8	539131853	BELLCRANK -	1	-
9	588812102	BRACKET -	1	-
10	588812002	BRACKET -	1	-
11	539131566	LATCH -	1	-
12	539105059	ROPE -	1	-
13	539131791	MOUNT -	1	-
14	532195161	STUD -	4	-
15	539131792	SPRING -	1	-
16	539112896	BOLT -	1	-
17	539102642	SPRING -	1	-
18	539132734	SPRING. TORSION -	1	-
19	539131850	HEIGHT. ADJUST. DECK	1	-

Ref.	Article N.	Description	Qty	Kit
		-		
20	539131860	PIVOT. LATCH. TRANSPORT -	1	-
21	539104808	SUPPORT -	4	-
22	539132182	PIN -	1	-
23	539132851	GRIP -	1	-
24	539115501	COTTER -	4	-
25	532194209	SPRING -	2	-
26	874780648	BOLT -	1	-
27	539990646	BOLT -	1	-
28	874780544	BOLT -	4	-
29	539108181	HCS 1/2-13 X 1-3/4 GR 8 ZD -	2	-
30	539990563	SCREW -	4	-
31	539112899	NUT, 5/16-18, NYLOC -	5	-
32	539976979	NUT -	4	-
33	873800800	NUT -	2	-
34	873900500	NUT -	2	-
35	539200282	NUT -	2	-
36	873900600	NUT -	4	-
37	819141614	WASHER -	1	-
38	539115528	1/2` CONTACT BELLSPR -	1	-
39	539109554	WASHER -	2	-
40	819191912	WASHER -	2	-

Ref.	Article N.	Description	Qty	Kit
41	539991043	BUSHING -	10	-
1	510408301	PEDAL -	1	-
2	539110808	CROSS LINK -	2	-
3	586701701	SPACER -	2	-
4	539131861	SPACER. .3 -	1	-
5	586928702	LIFT -	1	-
6	584392702	PLATE -	2	-
7	539131897	BELLCRANK -	1	-
8	539131853	BELLCRANK -	1	-
9	539112223	STRUT -	2	-
10	539109693	LIFT CHAIN - 3 LINK -	4	-
11	539131566	LATCH -	1	-
12	539105059	ROPE -	1	-
13	539991043	BUSHING *For 967177007-01*	10	-
13	819211616	WASHER *For 967177008-01, 967045501-00*	1	-
14	539132017	MOUNT -	2	-
15	532194209	SPRING *For 967177008-01, 967045501-00*	1	-
16	539112896	BOLT -	1	-
17	539102642	SPRING *For 967177007-01*	1	-
17	539131790	SPRING *For 967177008-01, 967045501-00*	1	-
18	539132734	SPRING. TORSION -	1	-
19	539131850	HEIGHT. ADJUST. DECK	1	-

Ref.	Article N.	Description	Qty	Kit
		-		
20	539131860	PIVOT. LATCH. TRANSPORT -	1	-
21	539104808	SUPPORT -	4	-
22	539132182	PIN -	1	-
24	539132851	GRIP -	1	-
25	539115501	COTTER -	6	-
26	874780544	BOLT *For 967177008-01, 967045501-00*	4	-
26	539101721	SCREW *For 967177007-01*	4	-
27	539108181	HCS 1/2-13 X 1-3/4 GR 8 ZD -	2	-
28	539976941	SCREW -	4	-
29	539101175	SCREW -	4	-
30	874780648	BOLT -	1	-
31	539990646	BOLT -	1	-
32	539108073	BOLT -	4	-
33	539200282	NUT -	2	-
34	539132019	NUT -	8	-
35	539102582	NUT -	8	-
36	539112899	NUT, 5/16-18, NYLOC *For 967177007-01*	5	-
37	539976979	NUT -	4	-
38	539101331	NUT *For 967177007-01*	1	-
38	873800800	NUT *For 967177008-01, 967045501-00*	1	-
39	819141614	WASHER -	1	-

Ref.	Article N.	Description	Qty	Kit
40	539115528	1/2` CONTACT BELLSPR -	2	-
41	539109554	WASHER *For 967177007-01*	2	-
41	819182212	WASHER *For 967177008-01, 967045501-00*	2	-
42	539112899	NUT, 5/16-18, NYLOC *For 967177007-01*	5	-
43	539131791	MOUNT *For 967177007-01*	1	-
44	539131792	SPRING *For 967177007-01*	1	-
1	539132151	ARM -	1	-
2	539105036	GRIP -	1	-
3	575229602	BRACKET -	1	-
4	575229702	BRACKET -	1	-
5	586738802	LEVER -	1	-
6	575230201	SPRING -	2	-
7	575230301	SPRING -	2	-
8	586830002	MOUNT -	1	-
9	539132154	ACTUATOR -	1	-
10	539132153	BELLCRANK -	2	-
11	539132424	LINKAGE. BRAKE -	1	-
12	575229802	BRACKET -	2	-
13	539132161	BLADE BUSHING -	4	-
14	539104763	CLIP -	3	-
15	582121801	CABLE ASSY -	1	-
16	582122001	CABLE ASSY	2	-

Ref.	Article N.	Description	Qty	Kit
		-		
17	505280001	TIE WRAP -	2	-
18	539990643	BOLT -	4	-
19	539108396	BOLT -	1	-
20	539990563	SCREW -	2	-
21	539990209	SCREW -	1	-
22	539110303	BOLT -	2	-
23	539990645	BOLT -	2	-
24	539990316	BOLT -	1	-
25	539131780	BOLT -	1	-
26	874490512	BOLT -	1	-
27	539112899	NUT, 5/16-18, NYLOC -	2	-
28	539990585	NUT -	5	-
29	539990717	NUT -	1	-
30	521996501	NUT -	2	-
31	539115617	NUT -	2	-
32	539200282	NUT -	2	-
33	539976978	NUT -	4	-
34	539107897	NUT -	2	-
35	539990055	WASHER -	8	-
36	539133007	WASHER -	1	-
37	539990122	WASHER -	2	-

Ref.	Article N.	Description	Qty	Kit
38	819182212	WASHER -	1	-
39	532197802	SWITCH -	1	-
1	593564002	ARM -	1	-
2	539105036	GRIP -	1	-
3	593279202	BRACKET -	1	-
4	593279902	BRACKET -	1	-
5	590337701	GEAR -	1	-
6	575230201	SPRING -	2	-
7	575230301	SPRING -	2	-
8	590631502	MOUNT -	1	-
9	590204501	GEAR -	1	-
10	539990196	NUT -	2	-
11	596018303	BRACKET -	6	-
12	539104763	CLIP -	3	-
13	582121801	CABLE ASSY -	1	-
14	582122001	CABLE ASSY -	1	-
15	582121801	CABLE ASSY -	2	-
16	582122001	CABLE ASSY -	1	-
17	596018303	BRACKET -	1	-
18	593239802	ACTUATOR -	1	-
19	539990643	BOLT -	4	-
20	539108396	BOLT	1	-

Ref.	Article N.	Description	Qty	Kit
		-		
21	525544001	BOLT -	3	-
22	539110303	BOLT -	2	-
23	539990645	BOLT -	2	-
24	539990316	BOLT -	1	-
25	539131780	BOLT -	1	-
26	874490512	BOLT -	1	-
27	525544001	BOLT -	1	-
28	539112899	NUT, 5/16-18, NYLOC -	1	-
29	539990585	NUT -	2	-
30	539990717	NUT -	1	-
31	521996501	NUT -	2	-
32	539115617	NUT -	2	-
33	539200282	NUT -	3	-
34	539976978	NUT -	4	-
35	539107897	NUT -	2	-
36	539990196	NUT -	2	-
37	539990055	WASHER -	8	-
38	819182212	WASHER -	1	-
39	539990122	WASHER -	2	-
40	819182212	WASHER -	1	-
41	595846701	BRAKE ASSY *NOT SHOWN*	1	-

Ref.	Article N.	Description	Qty	Kit
1	501580402	SEAT -	1	-
2	539130359	BELT -	1	-
3	539103247	WIRE -	1	-
4	501762102	SUPPORT -	1	-
5	584916802	MOUNT -	2	-
6	587613301	SPRING -	2	-
7	539104763	CLIP -	8	-
8	539130793	STOP -	1	-
9	539119741	SWITCH -	1	-
10	584809102	SUPPORT -	1	-
11	584990102	SUPPORT -	1	-
12	584990202	SUPPORT -	1	-
13	539105974	GROMMET -	1	-
14	874490512	BOLT -	2	-
15	525544001	BOLT -	4	-
16	874490560	BOLT -	2	-
17	539990645	BOLT -	3	-
18	539115620	1/4-20X3/4 CARR BLT -	1	-
19	539130896	BOLT -	2	-
20	539112034	BOLT *For 967844201-00*	2	-
20	539124775	SCREW *For 967177007-01, 967177008-01, 967045501-00*	2	-
21	872050506	BOLT	2	-

Ref.	Article N.	Description	Qty	Kit
		For 967844201-00		
22	539112899	NUT, 5/16-18, NYLOC -	9	-
23	539976979	NUT -	2	-
24	539990394	NUT -	2	-
25	539976978	NUT -	1	-
26	819141614	WASHER *For 967177007-01, 967177008-01, 967045501-00*	4	-
26	819091216	WASHER *For 967177007-01, 967177008-01, 967045501-00*	1	-
27	819141614	WASHER *For 967177007-01, 967177008-01, 967045501-00*	4	-
27	819091216	WASHER *For 967177007-01, 967177008-01, 967045501-00*	1	-
28	521996501	NUT *For 967177007-01, 967177008-01, 967045501-00*	1	-
29	873800500	LOCK NUT *For 967177007-01, 967177008-01, 967045501-00*	1	-
1	590090803	TUBE	1	-
2	590090804	TUBE	1	-
3	532109553	SWITCH	2	-
4	585124705	BRACKET	2	-
5	539438282	BEARING *For 967177007-01, 967177008-01, 967045501-00*	4	-
5	532438282	BEARING UNIT *For 967844201-00*	4	-
6	587187701	CONTROL	2	-
7	577420001	LEVER	2	-
8	584927201	SPACER	2	-
9	539102720	GAS SPRING	2	-
10	581437501	BLOCK	2	-
11	539102845	SPRING	2	-
12	576850301	SPRING	1	-
13	539131799	KNOB	1	-
14	574811401	ROD	2	-
15	539116689	ROD END COUPLER	2	-
16	588692502	ROD	2	-
17	579764601	JOINT	2	-

Ref.	Article N.	Description	Qty	Kit
18	581223001	PLATE *For 967844201-00*	2	-
19	576850402	SCREW *For 967177007-01, 967177008-01, 967045501-00*	2	-
19	539990585	NUT *For 967177007-01, 967177008-01, 967045501-00*	4	-
20	574822701	SCREW *For 967844201-00*	4	-
21	874780844	BOLT *For 967177007-01, 967177008-01, 967045501-00*	2	-
21	596580801	BOLT *NOTE: If you order 596580801 you will need to also order key 30 532423063 in the same quantity.*	1	-
22	874780844	BOLT *For 967177007-01, 967177008-01, 967045501-00*	2	-
22	539976935	SCREW *For 967177007-01, 967177008-01, 967045501-00*	4	-
23	539976935	SCREW *For 967177007-01, 967177008-01, 967045501-00*	4	-
23	525544001	BOLT *For 967177007-01, 967177008-01, 967045501-00*	4	-
24	525544001	BOLT *For 967177007-01, 967177008-01, 967045501-00*	4	-
24	874490512	BOLT *For 967177007-01, 967177008-01, 967045501-00*	8	-
25	576850402	SCREW *For 967177007-01, 967177008-01, 967045501-00*	2	-
25	874490512	BOLT *For 967177007-01, 967177008-01, 967045501-00*	8	-
26	539991073	NUT	2	-
27	539990585	NUT *For 967177007-01, 967177008-01, 967045501-00*	4	-
28	539990717	NUT *For 967177007-01, 967177008-01, 967045501-00*	6	-
28	539108010	NUT *For 967177007-01, 967177008-01, 967045501-00*	2	-
29	539990717	NUT *For 967177007-01, 967177008-01, 967045501-00*	4	-
29	539112899	NUT, 5/16-18, NYLOC *For 967177007-01, 967177008-01, 967045501-00*	10	-
30	819111116	WASHER *For 967177007-01, 967177008-01, 967045501-00*	12	-
30	532423063	WASHER	1	-

Ref.	Article N.	Description	Qty	Kit
		NOTE: If you order 532423063 you will need to also order key 30 596580801 in the same quantity.		
31	539990223	NUT	4	-
32	819111116	WASHER *For 967177007-01, 967177008-01, 967045501-00*	14	-
33	539130894	GRIP *For 967177007-01, 967177008-01, 967045501-00*	2	-
34	874780520	BOLT *For 967177007-01, 967177008-01, 967045501-00*	5	-
35	539108010	NUT *For 967177007-01, 967177008-01, 967045501-00*	2	-
36	595305701	SCREW	2	-
1	586955401	WHEEL ASSY -	2	-
2	581199501	WHEEL ASSY -	2	-
3	582746401	TIRE -	2	-
3	539102543	BEARING -	4	-
4	539102535	CAP -	2	-
5	586921902	FORK -	2	-
6	539102851	SEALING -	2	-
7	575334901	SPACER -	2	-
8	539101474	NIPPLE -	2	-
9	539102889	SPLIT PIN -	2	-
10	539105517	BOLT -	2	-
11	539102852	NUT -	2	-
12	521991101	NUT -	2	-
13	587653902	NUT -	8	-
14	819182212	WASHER -	2	-

FRAME

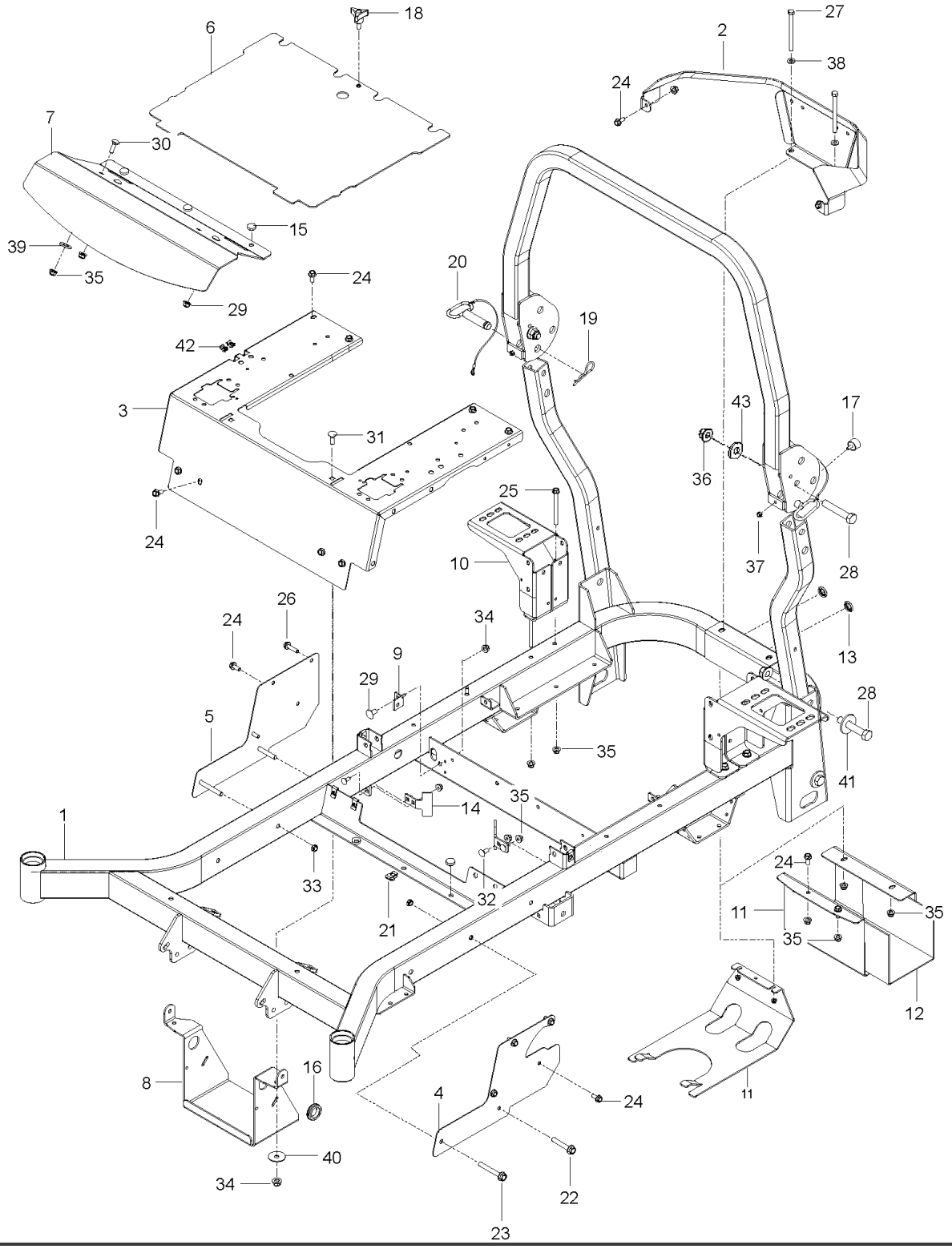

Ref.	Article N.	Description	Qty	Kit
1	586651402	PLATE -	1	-
2	574811001	PULLEY	1	-

Ref.	Article N.	Description	Qty	Kit
		-		
3	582042801	SOLENOID -	1	-
4	539101363	CLAMP -	1	-
5	584825501	HOSE ASSY -	1	-
6	575229902	BRACKET -	1	-
7	539102757	CABLE -	1	-
8	574607001	CLUTCH -	1	-
9	575017301	STOP -	1	-
10	539131604	MUFFLER ASSY -	1	-
11	583954501	TUBE -	1	-
12	583954801	TUBE -	1	-
13	586839701	GASKET -	2	-
14	532131563	COVER -	2	-
15	539102759	INSULATOR -	1	-
16	539912757	KEY -	1	-
17	539990071	BOLT -	1	-
18	817120616	SCREW -	4	-
19	539107271	SCREW -	2	-
20	874490512	BOLT -	8	-
21	581332802	BOLT -	1	-
22	539990302	HWST 1/4C X 3/8 -	1	-
23	539107475	BOLT -	2	-

Ref.	Article N.	Description	Qty	Kit
24	539108120	NUT -	4	-
25	539112899	NUT, 5/16-18, NYLOC -	10	-
26	539990053	WASHER -	1	-
27	539990247	WASHER -	1	-
1	586651402	PLATE	1	-
2	574846402	PLATE *For 967177008-01*	1	-
2	586670402	PLATE *For 967177007-01, 967045501-00*	1	-
3	574811001	PULLEY	1	-
4	539976688	PULLEY	1	-
5	532175820	PULLEY	1	-
6	574870901	DRIVE BELT	1	-
7	525435601	PIVOT	1	-
8	510206301	PIVOT	1	-
9	510041603	ARM	1	-
10	574607001	CLUTCH	1	-
11	575017302	STOP	1	-
12	539102757	CABLE *For 967177007-01, 967177008-01*	1	-
13	576701801	MUFFLER *For 967177007-01*	1	-
13	525750201	MUFFLER *For 967177008-01*	1	-
13	501451201	MUFFLER ASSY *For 967045501-00*	1	-
14	582042801	SOLENOID *For 967177007-01, 967177008-01*	1	-
15	510254401	SPRING	1	-
16	539114662	SHIELD, DUST	1	-
17	510254501	SHIELD	2	-
18	579150901	SHIELD *For 967177007-01, 967177008-01*	1	-
19	584825501	HOSE ASSY *For 967177008-01, 967045501-00*	1	-
20	522599001	ADAPTER *For 967177008-01*	1	-

Ref.	Article N.	Description	Qty	Kit
21	539101363	CLAMP *For 967177008-01, 967045501-00*	1	-
22	522837001	PLUG *For 967177008-01*	1	-
22	585807101	PLUG *For 967045501-00*	1	-
23	539912757	KEY	1	-
24	586839701	GASKET *For 967177007-01, 967177008-01*	2	-
25	532131563	COVER *For 967177007-01*	1	-
25	539102759	INSULATOR *For 967177008-01*	2	-
26	532131563	COVER *For 967177007-01*	2	-
27	539104763	CLIP	4	-
28	539100413	BOLT *For 967177007-01*	1	-
28	872140610	BOLT *For 967177008-01, 967045501-00*	1	-
29	872140622	BOLT *For 967045501-00*	1	-
29	539130235	RHSNB 3/8-16 X 2.75 GR5 ZD *For 967177007-01, 967177008-01*	1	-
30	872110508	BOLT *For 967177008-01*	2	-
31	581332802	BOLT	1	-
32	539103433	SCREW *For 967177007-01*	1	-
32	874780852	BOLT *For 967177008-01, 967045501-00*	1	-
33	525866201	BOLT *For 967177007-01*	1	-
33	874490632	SCREW *For 967177008-01, 967045501-00*	1	-
34	874490512	BOLT	11	-
35	874780408	BOLT *For 967045501-00*	1	-
35	539990071	BOLT *For 967177008-01*	1	-
36	817120616	SCREW *For 967177007-01, 967045501-00*	4	-

Ref.	Article N.	Description	Qty	Kit
36	539990563	SCREW *For 967177008-01*	4	-
37	592858702	BOLT	8	-
38	817490406	SCREW *For 967177008-01*	1	-
38	539990302	HWST 1/4C X 3/8 *For 967177007-01*	1	-
39	539990613	NUT *For 967177007-01*	1	-
40	539112899	NUT, 5/16-18, NYLOC	15	-
41	521991101	NUT	1	-
42	539200282	NUT	4	-
43	521996501	NUT *For 967177008-01, 967045501-00*	2	-
44	539108120	NUT *For 967177007-01, 967177008-01*	4	-
45	539990053	WASHER	1	-
46	539115528	1/2` CONTACT BELLSPR	1	-
47	539990247	WASHER	1	-
48	539109562	WASHER	1	-
50	539109554	WASHER *For 967177007-01*	2	-
50	819182212	WASHER *For 967177008-01, 967045501-00*	2	-
51	539111897	WASHER	1	-
52	819141614	WASHER	1	-
53	539990118	WASHER *For 967177008-01, 967045501-00*	4	-
54	539990613	NUT *For 967177007-01*	1	-
54	521996501	NUT *For 967177008-01, 967045501-00*	2	-
55	532183906	SCREW *For 967177007-01*	4	-
55	532192334	SCREW *For 967045501-00*	4	-
91	501279301	HARNESS *For 967045501-00*	1	-
92	586839901	GASKET *For 967045501-00, NOT SHOWN*	2	-
93	587450101	HARNESS *For 967045501-00*	1	-

Ref.	Article N.	Description	Qty	Kit
94	574825801	KIT *For 967045501-00, SPARK ARRESTOR*	1	-
1	501656001	FRAME -	1	-
2	586893002	GUARD -	1	-
3	586867702	SUPPORT -	1	-
4	586560101	BRACKET -	1	-
5	586560201	BRACKET -	1	-
6	539132744	PLATE -	1	-
7	539132380	PLATE -	1	-
8	594037402	BRACKET *For all EXCEPT 967844201-00, BLK*	1	-
8	587048702	BRACKET *For 967844201-00*	1	-
9	575245202	BRACKET -	2	-
10	575533602	MOUNT -	2	-
11	900000002	DUMMY PART *For all EXCEPT 967844201-00, 593 79 55-05 Guard, Skid Gray*	1	-
11	575230402	SHIELD *For 967844201-00*	1	-
12	539132859	HEAT SHIELD -	1	-
13	587990501	CAP -	2	-
14	593634302	STOP *For all EXCEPT 967844201-00*	2	-
14	505256401	STOP *For 967844201-00*	2	-
15	539102587	ABSORBER -	7	-
16	539105974	GROMMET -	1	-
17	522801401	BUMPER *For 967844201-00*	2	-
17	874490644	BOLT	2	-

Ref.	Article N.	Description	Qty	Kit
		For 967844201-00		
18	539104411	KNOB -	1	-
19	539200715	PIN *For 967844201-00*	2	-
19	874490512	BOLT *For 967844201-00*	1	-
20	539133006	BOLT *For 967844201-00*	2	-
20	574388001	PIN *For 967844201-00*	2	-
21	539104763	CLIP *For 967844201-00*	5	-
22	539133006	BOLT *For 967844201-00*	2	-
22	525544001	BOLT *For 967844201-00*	1	-
23	874490644	BOLT *For 967844201-00*	2	-
23	539102335	BOLT *For 967844201-00*	2	-
24	874490512	BOLT *For 967844201-00*	18	-
24	539109117	BOLT *For all EXCEPT 967844201-00*	2	-
25	872140508	BOLT *For all EXCEPT 967844201-00*	3	-
25	874490560	BOLT *For 967844201-00*	4	-
26	525544001	BOLT *For 967844201-00*	1	-
26	872110606	BOLT *For all EXCEPT 967844201-00*	6	-
27	539102335	BOLT *For 967844201-00*	2	-
27	539200282	NUT *For 967844201-00*	6	-
28	874490560	BOLT *For 967844201-00*	4	-
28	580754601	BOLT *For 967844201-00*	6	-
29	872140506	BOLT *For 967844201-00*	6	-

Ref.	Article N.	Description	Qty	Kit
29	521996501	NUT *For all EXCEPT 967844201-00*	2	-
30	539990208	SCREW *For 967844201-00*	3	-
30	539112899	NUT, 5/16-18, NYLOC *For all EXCEPT 967844201-00*	12	-
31	539990645	BOLT -	2	-
32	539990316	BOLT *For 967844201-00*	4	-
32	819111116	WASHER *For all EXCEPT 967844201-00*	2	-
33	539200282	NUT *For 967844201-00*	6	-
33	539990250	WASHER *For all EXCEPT 967844201-00*	1	-
34	521996501	NUT *For all EXCEPT 967844201-00*	2	-
35	539112899	NUT, 5/16-18, NYLOC *For all EXCEPT 967844201-00*	13	-
36	525829101	NUT -	6	-
37	539976978	NUT *For 967844201-00*	2	-
37	873800400	NUT *For all EXCEPT 967844201-00*	4	-
38	819111116	WASHER *For all EXCEPT 967844201-00*	2	-
39	539990250	WASHER *For all EXCEPT 967844201-00*	1	-
40	819132416	WASHER -	2	-
41	539102653	WASHER *For 967844201-00*	4	-
42	539104763	CLIP *For 967844201-00*	8	-
43	539102653	WASHER *For 967844201-00*	4	-
62	575274801	KIT *For 967844201-00, NOT SHOWN PROTECTION FRAME*	1	-
1	586670402	PLATE	1	-
2	539976688	PULLEY	1	-
3	532175820	PULLEY	1	-

Ref.	Article N.	Description	Qty	Kit
4	510041603	ARM	1	-
5	574870901	DRIVE BELT	1	-
6	584994202	SHIELD	2	-
7	539102587	ABSORBER	2	-
8	510206301	PIVOT	1	-
9	525435601	PIVOT	1	-
10	539104763	CLIP	4	-
11	510254501	SHIELD	2	-
12	539114662	SHIELD, DUST	1	-
13	510254401	SPRING	1	-
14	872140610	BOLT	1	-
15	539130235	RHSNB 3/8-16 X 2.75 GR5 ZD	1	-
16	874490632	SCREW	1	-
17	874490512	BOLT	3	-
18	592858702	BOLT	9	-
19	874780852	BOLT	1	-
20	521991101	NUT	1	-
21	521996501	NUT	2	-
22	539112899	NUT, 5/16-18, NYLOC	5	-
23	539200282	NUT	4	-
24	539990613	NUT	1	-
25	539115528	1/2` CONTACT BELLSPR	1	-
26	819182212	WASHER	2	-
27	819141614	WASHER	1	-
28	539109562	WASHER	1	-
31	539111897	WASHER	1	-
1	574569101	TRANSMISSION *LEFT*	1	-
2	574569102	TRANSMISSION *RIGHT*	1	-
3	593278902	BRACKET *For 967177008-01, 967045501-00, 967844201-00*	1	-
3	575017102	BRACKET *For 967177007-01*	1	-
4	593279002	BRACKET *For 967177008-01, 967045501-00, 967844201-00*	1	-
4	575017002	BRACKET *For 967177007-01*	1	-
5	539131616	LINKAGE. LEFT BYPASS	1	-
6	539131618	LINKAGE	1	-

Ref.	Article N.	Description	Qty	Kit
7	574892101	HOSE ASSY	2	-
8	586067501	HOSE	1	-
9	585318201	TANK	1	-
10	584994202	SHIELD	2	-
11	539113466	OIL FILTER	2	-
12	530095646	FUEL FILTER	1	-
13	586072701	CAP	1	-
14	539976988	PIN	2	-
15	539102587	ABSORBER	2	-
16	539976988	PIN	2	-
17	539990643	BOLT	1	-
18	592858702	BOLT	9	-
19	539101721	SCREW *For 967177007-01*	4	-
19	539976978	NUT *For 967177008-01, 967045501-00, 967844201-00*	4	-
20	539112899	NUT, 5/16-18, NYLOC	2	-
21	574233801	SCREW	4	-
22	539990118	WASHER	4	-
23	539112899	NUT, 5/16-18, NYLOC	8	-
24	596204101	WASHER	2	-
25	539990118	WASHER	2	-
26	539990187	WASHER	4	-
27	539990055	WASHER	4	-
28	539990122	WASHER	2	-
1	585722303	FUEL TANK ASSY	1	-
2	539107593	CONSOLE	1	-
3	539102436	BATTERY	1	-
4	588107201	BRACKET *For 967045501-00, 967844201-00*	1	-
4	593634404	BRACKET *For 967177008-01*	1	-
4	510030001	BRACKET *For 967177007-01*	1	-
5	588030801	CABLE	1	-
6	588030701	CABLE	1	-
7	574841204	PLATE *For 967177007-01, 967045501-00, 967844201-00*	1	-
7	592877402	PLATE *For 967177008-01*	1	-

Ref.	Article N.	Description	Qty	Kit
8	582107602	SWITCH *For 967177007-01, 967177008-01, 967844201-00*	1	-
8	539131627	SWITCH *For 967045501-00*	1	-
9	574455401	SWITCH	1	-
10	581878301	LIGHT *For 967045501-00*	1	-
10	584971801	CHOKE *For 967844201-00*	1	-
10	574206903	CABLE *For 967177007-01, 967177008-01*	1	-
11	539102732	THROTTLE *For 967045501-00, 967844201-00*	1	-
11	539112438	THROTTLE CABLE *For 967177007-01, 967177008-01*	1	-
12	539133049	KNOB	1	-
13	586123901	FUEL HOSE *For 967177007-01, 967045501-00*	1	-
13	586123903	FUEL HOSE *For 967177008-01, 967844201-00*	1	-
14	576469201	FITTING	1	-
15	575018101	CAP	1	-
16	576618101	TANK VENT	1	-
17	539916325	VALVE *For 967844201-00*	1	-
18	576618201	GROMMET	1	-
19	539105245	GROMMET	1	-
20	539103178	NUT CAP	1	-
21	575436501	CLAMP	2	-
22	532123487	HOSE CLAMP *For 967844201-00*	4	-
23	587044810	HOSE *For 967844201-00*	2	-
24	587044539	HOSE *For 967045501-00*	1	-
24	587044536	HOSE *For 967177008-01, CUT TO LENGTH*	1	-
24	587044555	HOSE *For 967844201-00*	1	-
24	587044564	HOSE *For 967177007-01, CUT TO FIT*	1	-
25	574455501	KEY	1	-

Ref.	Article N.	Description	Qty	Kit
26	586161801	HOUR METER	1	-
28	582484201	SCREW	6	-
29	588843202	SUPPORT *For 967177008-01, 967844201-00*	2	-
29	539131671	SUPPORT *For 967177007-01, 967045501-00*	2	-
30	510064001	HOOK	2	-
31	532435395	TERMINAL COVER	1	-
32	539976934	SCREW *For 967177008-01, 967844201-00*	2	-
32	874780512	SCREW *For 967177007-01, 967045501-00*	2	-
33	872140506	BOLT *For 967177007-01, 967045501-00*	2	-
33	539990316	BOLT *For 967177008-01, 967844201-00*	2	-
34	539990411	SCREW *For 967045501-00, 967844201-00*	6	-
34	817490516	SCREW *For 967045501-00, 967844201-00*	3	-
35	539990411	SCREW *For 967045501-00, 967844201-00*	6	-
35	817490516	SCREW *For 967045501-00, 967844201-00*	3	-
36	539976977	NUT	2	-
37	539990997	NUT	2	-
38	539112899	NUT, 5/16-18, NYLOC	13	-
39	819070818	WASHER	4	-
40	819111116	WASHER	2	-
41	539990187	WASHER	2	-
42	532197802	SWITCH *For 967177008-01, 967177007-01*	1	-
42	539113792	SWITCH *For 967045501-00*	1	-
43	532109553	SWITCH *For 967177007-01, 967177008-01, 967045501-00*	2	-
44	581223001	PLATE *For 967177007-01, 967177008-01, 967045501-00*	2	-
45	574822701	SCREW *For 967177007-01, 967177008-01, 967045501-00*	4	-
63	589669901	HARNESS *For 967177007-01, 967844201-00*	1	-

Ref.	Article N.	Description	Qty	Kit
64	532409615	HARNESS *For 967177007-01, 967844201-00*	1	-
65	501279301	HARNESS *For 967045501-00*	1	-
66	900000002	DUMMY PART *For 967177008-01, 589 66 99-02 Harness w/Brake Switch*	1	-
1	581505401	DECK -	1	-
2	539104335	DRIVE BELT -	1	-
3	539113312	BLADE -	3	-
4	539131898	SPINDLE -	3	-
5	539103427	BUSHING -	1	-
6	539112169	BLADE BUSHING -	2	-
7	589766101	PULLEY -	3	-
8	539113300	PULLEY -	3	-
9	539112198	ARM -	1	-
10	539113319	SHIELD -	1	-
11	539113322	SHIELD -	1	-
12	584859402	BRACKET -	2	-
13	584859404	BRACKET -	2	-
14	539130901	CHUTE -	1	-
15	539113317	PLATE -	1	-
16	585323901	BEARING *For 967177008-01, 967045501-00*	3	-
16	532110485	BEARING *For 967177007-01, 967844201-00*	3	-
17	539103256	SPRING -	1	-
18	581606106	BRACKET	1	-

Ref.	Article N.	Description	Qty	Kit
		For 967844201-00		
18	581606102	BRACKET *For 967177007-01, 967177008-01, 967045501-00, ORG*	1	-
19	539130917	BRACKET -	1	-
20	532176066	ROLLER -	1	-
21	532179127	PIN -	1	-
22	539131859	PIN -	2	-
23	532133957	WHEEL -	2	-
24	539976998	NIPPLE -	1	-
25	876020412	SPLIT PIN -	2	-
26	581606102	BRACKET *For 967177007-01, 967177008-01, 967045501-00, ORG*	1	-
26	592964402	BRACKET *For 967177007-01, 967177008-01, 967045501-00*	1	-
27	532187291	SHAFT -	3	-
28	539104763	CLIP *For 967844201-00*	8	-
28	874780648	BOLT *For 967177007-01, 967177008-01, 967045501-00*	2	-
29	539108396	BOLT -	2	-
30	539990563	SCREW -	2	-
31	539976934	SCREW -	8	-
32	539990582	SCREW -	1	-
33	539103433	SCREW *For 967177007-01, 967844201-00*	1	-
33	589343201	MANDREL *For 967177008-01, 967045501-00*	1	-
34	874780520	BOLT -	2	-
35	539990799	BOLT -	3	-

Ref.	Article N.	Description	Qty	Kit
36	872110508	BOLT *For 967177007-01*	2	-
36	539107271	SCREW *For 967177008-01, 967045501-00, 967844201-00*	2	-
37	539100472	SCREW -	2	-
38	539102933	SCREW -	2	-
39	532193003	SCREW -	3	-
40	532137644	SCREW -	2	-
41	584953901	BOLT -	12	-
42	874780648	BOLT *For 967177007-01, 967177008-01, 967045501-00*	2	-
42	532400234	NUT *For 967177007-01, 967177008-01, 967045501-00*	3	-
43	539990717	NUT -	3	-
44	539990196	NUT -	2	-
45	539976979	NUT -	6	-
46	539101331	NUT *For 967177007-01*	1	-
46	873800800	NUT *For 967177008-01, 967045501-00, 967844201-00*	1	-
47	539112899	NUT, 5/16-18, NYLOC -	8	-
48	596134801	HEXAGON NUT -	3	-
49	539106504	WASHER -	2	-
50	819121414	WASHER *For 967844201-00*	10	-
50	539990692	WASHER *For 967177007-01, 967177008-01, 967045501-00*	11	-
51	539109600	WASHER -	8	-
52	539102243	WASHER -	1	-
53	539990550	WASHER	1	-

Ref.	Article N.	Description	Qty	Kit
		For 967177007-01		
53	819182212	WASHER *For 967177008-01, 967045501-00, 967844201-00*	1	-
54	532187690	WASHER -	3	-
55	819141614	WASHER -	3	-
1	510408301	PEDAL -	1	-
2	539110808	CROSS LINK -	2	-
3	586701701	SPACER -	2	-
4	539131861	SPACER. .3 -	1	-
5	586928702	LIFT -	1	-
6	584392702	PLATE -	2	-
7	539131897	BELLCRANK -	1	-
8	539131853	BELLCRANK -	1	-
9	588812102	BRACKET -	1	-
10	588812002	BRACKET -	1	-
11	539131566	LATCH -	1	-
12	539105059	ROPE -	1	-
13	539131791	MOUNT -	1	-
14	532195161	STUD -	4	-
15	539131792	SPRING -	1	-
16	539112896	BOLT -	1	-
17	539102642	SPRING -	1	-
18	539132734	SPRING. TORSION -	1	-

Ref.	Article N.	Description	Qty	Kit
19	539131850	HEIGHT. ADJUST. DECK -	1	-
20	539131860	PIVOT. LATCH. TRANSPORT -	1	-
21	539104808	SUPPORT -	4	-
22	539132182	PIN -	1	-
23	539132851	GRIP -	1	-
24	539115501	COTTER -	4	-
25	532194209	SPRING -	2	-
26	874780648	BOLT -	1	-
27	539990646	BOLT -	1	-
28	874780544	BOLT -	4	-
29	539108181	HCS 1/2-13 X 1-3/4 GR 8 ZD -	2	-
30	539990563	SCREW -	4	-
31	539112899	NUT, 5/16-18, NYLOC -	5	-
32	539976979	NUT -	4	-
33	873800800	NUT -	2	-
34	873900500	NUT -	2	-
35	539200282	NUT -	2	-
36	873900600	NUT -	4	-
37	819141614	WASHER -	1	-
38	539115528	1/2` CONTACT BELLSPR -	1	-
39	539109554	WASHER -	2	-
40	819191912	WASHER	2	-

Ref.	Article N.	Description	Qty	Kit
		-		
41	539991043	BUSHING -	10	-
1	510408301	PEDAL -	1	-
2	539110808	CROSS LINK -	2	-
3	586701701	SPACER -	2	-
4	539131861	SPACER. .3 -	1	-
5	586928702	LIFT -	1	-
6	584392702	PLATE -	2	-
7	539131897	BELLCRANK -	1	-
8	539131853	BELLCRANK -	1	-
9	539112223	STRUT -	2	-
10	539109693	LIFT CHAIN - 3 LINK -	4	-
11	539131566	LATCH -	1	-
12	539105059	ROPE -	1	-
13	539991043	BUSHING *For 967177007-01*	10	-
13	819211616	WASHER *For 967177008-01, 967045501-00*	1	-
14	539132017	MOUNT -	2	-
15	532194209	SPRING *For 967177008-01, 967045501-00*	1	-
16	539112896	BOLT -	1	-
17	539102642	SPRING *For 967177007-01*	1	-
17	539131790	SPRING *For 967177008-01, 967045501-00*	1	-
18	539132734	SPRING. TORSION -	1	-

Ref.	Article N.	Description	Qty	Kit
19	539131850	HEIGHT. ADJUST. DECK -	1	-
20	539131860	PIVOT. LATCH. TRANSPORT -	1	-
21	539104808	SUPPORT -	4	-
22	539132182	PIN -	1	-
24	539132851	GRIP -	1	-
25	539115501	COTTER -	6	-
26	874780544	BOLT *For 967177008-01, 967045501-00*	4	-
26	539101721	SCREW *For 967177007-01*	4	-
27	539108181	HCS 1/2-13 X 1-3/4 GR 8 ZD -	2	-
28	539976941	SCREW -	4	-
29	539101175	SCREW -	4	-
30	874780648	BOLT -	1	-
31	539990646	BOLT -	1	-
32	539108073	BOLT -	4	-
33	539200282	NUT -	2	-
34	539132019	NUT -	8	-
35	539102582	NUT -	8	-
36	539112899	NUT, 5/16-18, NYLOC *For 967177007-01*	5	-
37	539976979	NUT -	4	-
38	539101331	NUT *For 967177007-01*	1	-
38	873800800	NUT *For 967177008-01, 967045501-00*	1	-
39	819141614	WASHER	1	-

Ref.	Article N.	Description	Qty	Kit
		-		
40	539115528	1/2` CONTACT BELLSPR -	2	-
41	539109554	WASHER *For 967177007-01*	2	-
41	819182212	WASHER *For 967177008-01, 967045501-00*	2	-
42	539112899	NUT, 5/16-18, NYLOC *For 967177007-01*	5	-
43	539131791	MOUNT *For 967177007-01*	1	-
44	539131792	SPRING *For 967177007-01*	1	-
1	539132151	ARM -	1	-
2	539105036	GRIP -	1	-
3	575229602	BRACKET -	1	-
4	575229702	BRACKET -	1	-
5	586738802	LEVER -	1	-
6	575230201	SPRING -	2	-
7	575230301	SPRING -	2	-
8	586830002	MOUNT -	1	-
9	539132154	ACTUATOR -	1	-
10	539132153	BELLCRANK -	2	-
11	539132424	LINKAGE. BRAKE -	1	-
12	575229802	BRACKET -	2	-
13	539132161	BLADE BUSHING -	4	-
14	539104763	CLIP -	3	-
15	582121801	CABLE ASSY -	1	-

Ref.	Article N.	Description	Qty	Kit
16	582122001	CABLE ASSY -	2	-
17	505280001	TIE WRAP -	2	-
18	539990643	BOLT -	4	-
19	539108396	BOLT -	1	-
20	539990563	SCREW -	2	-
21	539990209	SCREW -	1	-
22	539110303	BOLT -	2	-
23	539990645	BOLT -	2	-
24	539990316	BOLT -	1	-
25	539131780	BOLT -	1	-
26	874490512	BOLT -	1	-
27	539112899	NUT, 5/16-18, NYLOC -	2	-
28	539990585	NUT -	5	-
29	539990717	NUT -	1	-
30	521996501	NUT -	2	-
31	539115617	NUT -	2	-
32	539200282	NUT -	2	-
33	539976978	NUT -	4	-
34	539107897	NUT -	2	-
35	539990055	WASHER -	8	-
36	539133007	WASHER -	1	-
37	539990122	WASHER	2	-

Ref.	Article N.	Description	Qty	Kit
		-		
38	819182212	WASHER -	1	-
39	532197802	SWITCH -	1	-
1	593564002	ARM -	1	-
2	539105036	GRIP -	1	-
3	593279202	BRACKET -	1	-
4	593279902	BRACKET -	1	-
5	590337701	GEAR -	1	-
6	575230201	SPRING -	2	-
7	575230301	SPRING -	2	-
8	590631502	MOUNT -	1	-
9	590204501	GEAR -	1	-
10	539990196	NUT -	2	-
11	596018303	BRACKET -	6	-
12	539104763	CLIP -	3	-
13	582121801	CABLE ASSY -	1	-
14	582122001	CABLE ASSY -	1	-
15	582121801	CABLE ASSY -	2	-
16	582122001	CABLE ASSY -	1	-
17	596018303	BRACKET -	1	-
18	593239802	ACTUATOR -	1	-
19	539990643	BOLT -	4	-

Ref.	Article N.	Description	Qty	Kit
20	539108396	BOLT -	1	-
21	525544001	BOLT -	3	-
22	539110303	BOLT -	2	-
23	539990645	BOLT -	2	-
24	539990316	BOLT -	1	-
25	539131780	BOLT -	1	-
26	874490512	BOLT -	1	-
27	525544001	BOLT -	1	-
28	539112899	NUT, 5/16-18, NYLOC -	1	-
29	539990585	NUT -	2	-
30	539990717	NUT -	1	-
31	521996501	NUT -	2	-
32	539115617	NUT -	2	-
33	539200282	NUT -	3	-
34	539976978	NUT -	4	-
35	539107897	NUT -	2	-
36	539990196	NUT -	2	-
37	539990055	WASHER -	8	-
38	819182212	WASHER -	1	-
39	539990122	WASHER -	2	-
40	819182212	WASHER -	1	-
41	595846701	BRAKE ASSY	1	-

Ref.	Article N.	Description	Qty	Kit
		NOT SHOWN		
1	501580402	SEAT -	1	-
2	539130359	BELT -	1	-
3	539103247	WIRE -	1	-
4	501762102	SUPPORT -	1	-
5	584916802	MOUNT -	2	-
6	587613301	SPRING -	2	-
7	539104763	CLIP -	8	-
8	539130793	STOP -	1	-
9	539119741	SWITCH -	1	-
10	584809102	SUPPORT -	1	-
11	584990102	SUPPORT -	1	-
12	584990202	SUPPORT -	1	-
13	539105974	GROMMET -	1	-
14	874490512	BOLT -	2	-
15	525544001	BOLT -	4	-
16	874490560	BOLT -	2	-
17	539990645	BOLT -	3	-
18	539115620	1/4-20X3/4 CARR BLT -	1	-
19	539130896	BOLT -	2	-
20	539112034	BOLT *For 967844201-00*	2	-
20	539124775	SCREW *For 967177007-01, 967177008-01, 967045501-00*	2	-

Ref.	Article N.	Description	Qty	Kit
21	872050506	BOLT *For 967844201-00*	2	-
22	539112899	NUT, 5/16-18, NYLOC -	9	-
23	539976979	NUT -	2	-
24	539990394	NUT -	2	-
25	539976978	NUT -	1	-
26	819141614	WASHER *For 967177007-01, 967177008-01, 967045501-00*	4	-
26	819091216	WASHER *For 967177007-01, 967177008-01, 967045501-00*	1	-
27	819141614	WASHER *For 967177007-01, 967177008-01, 967045501-00*	4	-
27	819091216	WASHER *For 967177007-01, 967177008-01, 967045501-00*	1	-
28	521996501	NUT *For 967177007-01, 967177008-01, 967045501-00*	1	-
29	873800500	LOCK NUT *For 967177007-01, 967177008-01, 967045501-00*	1	-
1	590090803	TUBE	1	-
2	590090804	TUBE	1	-
3	532109553	SWITCH	2	-
4	585124705	BRACKET	2	-
5	539438282	BEARING *For 967177007-01, 967177008-01, 967045501-00*	4	-
5	532438282	BEARING UNIT *For 967844201-00*	4	-
6	587187701	CONTROL	2	-
7	577420001	LEVER	2	-
8	584927201	SPACER	2	-
9	539102720	GAS SPRING	2	-
10	581437501	BLOCK	2	-
11	539102845	SPRING	2	-
12	576850301	SPRING	1	-
13	539131799	KNOB	1	-
14	574811401	ROD	2	-
15	539116689	ROD END COUPLER	2	-
16	588692502	ROD	2	-

Ref.	Article N.	Description	Qty	Kit
17	579764601	JOINT	2	-
18	581223001	PLATE *For 967844201-00*	2	-
19	576850402	SCREW *For 967177007-01, 967177008-01, 967045501-00*	2	-
19	539990585	NUT *For 967177007-01, 967177008-01, 967045501-00*	4	-
20	574822701	SCREW *For 967844201-00*	4	-
21	874780844	BOLT *For 967177007-01, 967177008-01, 967045501-00*	2	-
21	596580801	BOLT *NOTE: If you order 596580801 you will need to also order key 30 532423063 in the same quantity.*	1	-
22	874780844	BOLT *For 967177007-01, 967177008-01, 967045501-00*	2	-
22	539976935	SCREW *For 967177007-01, 967177008-01, 967045501-00*	4	-
23	539976935	SCREW *For 967177007-01, 967177008-01, 967045501-00*	4	-
23	525544001	BOLT *For 967177007-01, 967177008-01, 967045501-00*	4	-
24	525544001	BOLT *For 967177007-01, 967177008-01, 967045501-00*	4	-
24	874490512	BOLT *For 967177007-01, 967177008-01, 967045501-00*	8	-
25	576850402	SCREW *For 967177007-01, 967177008-01, 967045501-00*	2	-
25	874490512	BOLT *For 967177007-01, 967177008-01, 967045501-00*	8	-
26	539991073	NUT	2	-
27	539990585	NUT *For 967177007-01, 967177008-01, 967045501-00*	4	-
28	539990717	NUT *For 967177007-01, 967177008-01, 967045501-00*	6	-
28	539108010	NUT *For 967177007-01, 967177008-01, 967045501-00*	2	-
29	539990717	NUT *For 967177007-01, 967177008-01, 967045501-00*	4	-
29	539112899	NUT, 5/16-18, NYLOC *For 967177007-01, 967177008-01, 967045501-00*	10	-
30	819111116	WASHER *For 967177007-01, 967177008-01, 967045501-00*	12	-

Ref.	Article N.	Description	Qty	Kit
30	532423063	WASHER *NOTE: If you order 532423063 you will need to also order key 30 596580801 in the same quantity.*	1	-
31	539990223	NUT	4	-
32	819111116	WASHER *For 967177007-01, 967177008-01, 967045501-00*	14	-
33	539130894	GRIP *For 967177007-01, 967177008-01, 967045501-00*	2	-
34	874780520	BOLT *For 967177007-01, 967177008-01, 967045501-00*	5	-
35	539108010	NUT *For 967177007-01, 967177008-01, 967045501-00*	2	-
36	595305701	SCREW	2	-
1	586955401	WHEEL ASSY -	2	-
2	581199501	WHEEL ASSY -	2	-
3	582746401	TIRE -	2	-
3	539102543	BEARING -	4	-
4	539102535	CAP -	2	-
5	586921902	FORK -	2	-
6	539102851	SEALING -	2	-
7	575334901	SPACER -	2	-
8	539101474	NIPPLE -	2	-
9	539102889	SPLIT PIN -	2	-
10	539105517	BOLT -	2	-
11	539102852	NUT -	2	-
12	521991101	NUT -	2	-
13	587653902	NUT -	8	-
14	819182212	WASHER -	2	-

HYDRAULIC FRAME

For 967844201-00

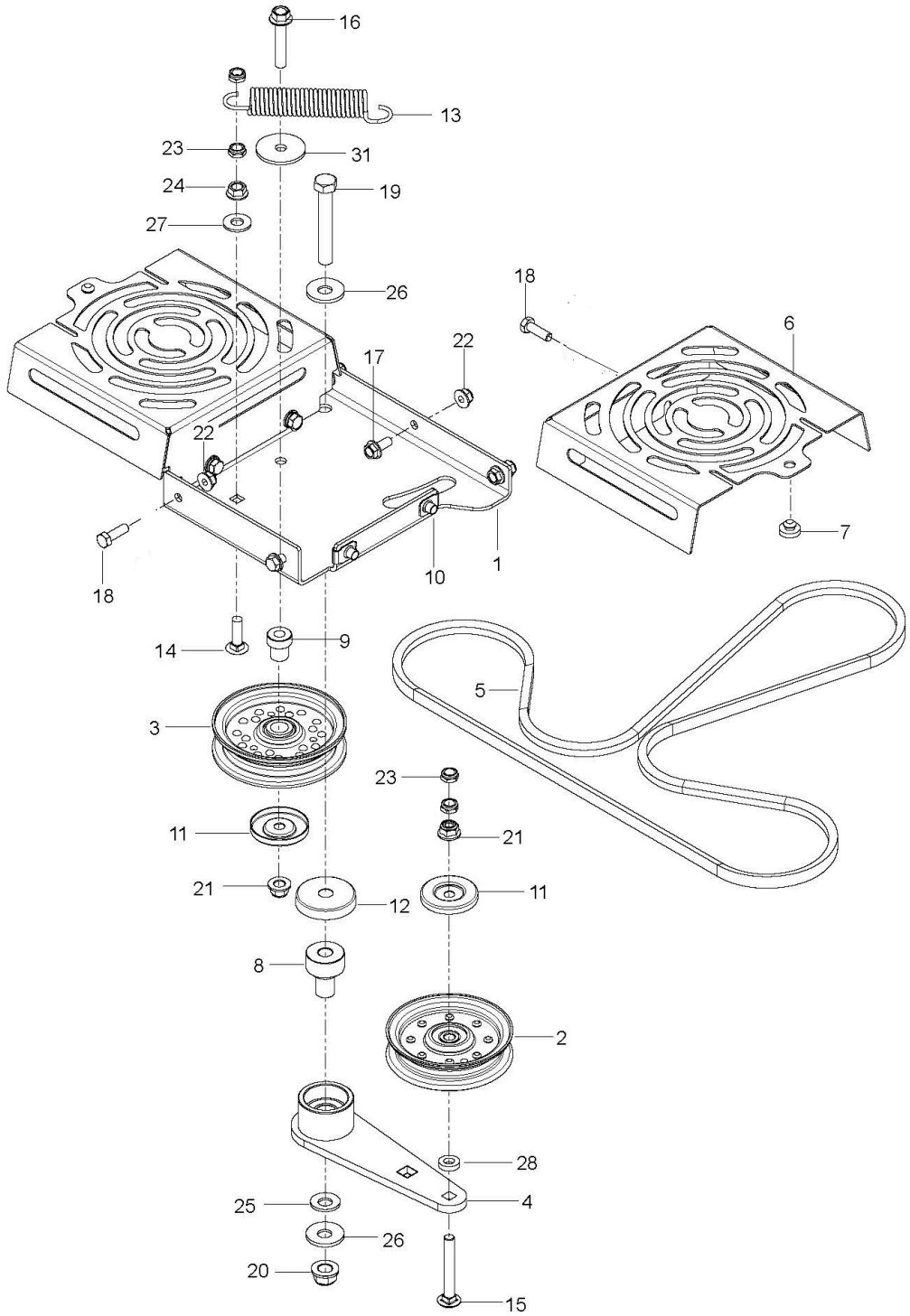

Ref.	Article N.	Description	Qty	Kit
1	586651402	PLATE -	1	-
2	574811001	PULLEY	1	-

Ref.	Article N.	Description	Qty	Kit
		-		
3	582042801	SOLENOID -	1	-
4	539101363	CLAMP -	1	-
5	584825501	HOSE ASSY -	1	-
6	575229902	BRACKET -	1	-
7	539102757	CABLE -	1	-
8	574607001	CLUTCH -	1	-
9	575017301	STOP -	1	-
10	539131604	MUFFLER ASSY -	1	-
11	583954501	TUBE -	1	-
12	583954801	TUBE -	1	-
13	586839701	GASKET -	2	-
14	532131563	COVER -	2	-
15	539102759	INSULATOR -	1	-
16	539912757	KEY -	1	-
17	539990071	BOLT -	1	-
18	817120616	SCREW -	4	-
19	539107271	SCREW -	2	-
20	874490512	BOLT -	8	-
21	581332802	BOLT -	1	-
22	539990302	HWST 1/4C X 3/8 -	1	-
23	539107475	BOLT -	2	-

Ref.	Article N.	Description	Qty	Kit
24	539108120	NUT -	4	-
25	539112899	NUT, 5/16-18, NYLOC -	10	-
26	539990053	WASHER -	1	-
27	539990247	WASHER -	1	-
1	586651402	PLATE	1	-
2	574846402	PLATE *For 967177008-01*	1	-
2	586670402	PLATE *For 967177007-01, 967045501-00*	1	-
3	574811001	PULLEY	1	-
4	539976688	PULLEY	1	-
5	532175820	PULLEY	1	-
6	574870901	DRIVE BELT	1	-
7	525435601	PIVOT	1	-
8	510206301	PIVOT	1	-
9	510041603	ARM	1	-
10	574607001	CLUTCH	1	-
11	575017302	STOP	1	-
12	539102757	CABLE *For 967177007-01, 967177008-01*	1	-
13	576701801	MUFFLER *For 967177007-01*	1	-
13	525750201	MUFFLER *For 967177008-01*	1	-
13	501451201	MUFFLER ASSY *For 967045501-00*	1	-
14	582042801	SOLENOID *For 967177007-01, 967177008-01*	1	-
15	510254401	SPRING	1	-
16	539114662	SHIELD, DUST	1	-
17	510254501	SHIELD	2	-
18	579150901	SHIELD *For 967177007-01, 967177008-01*	1	-
19	584825501	HOSE ASSY *For 967177008-01, 967045501-00*	1	-
20	522599001	ADAPTER *For 967177008-01*	1	-

Ref.	Article N.	Description	Qty	Kit
21	539101363	CLAMP *For 967177008-01, 967045501-00*	1	-
22	522837001	PLUG *For 967177008-01*	1	-
22	585807101	PLUG *For 967045501-00*	1	-
23	539912757	KEY	1	-
24	586839701	GASKET *For 967177007-01, 967177008-01*	2	-
25	532131563	COVER *For 967177007-01*	1	-
25	539102759	INSULATOR *For 967177008-01*	2	-
26	532131563	COVER *For 967177007-01*	2	-
27	539104763	CLIP	4	-
28	539100413	BOLT *For 967177007-01*	1	-
28	872140610	BOLT *For 967177008-01, 967045501-00*	1	-
29	872140622	BOLT *For 967045501-00*	1	-
29	539130235	RHSNB 3/8-16 X 2.75 GR5 ZD *For 967177007-01, 967177008-01*	1	-
30	872110508	BOLT *For 967177008-01*	2	-
31	581332802	BOLT	1	-
32	539103433	SCREW *For 967177007-01*	1	-
32	874780852	BOLT *For 967177008-01, 967045501-00*	1	-
33	525866201	BOLT *For 967177007-01*	1	-
33	874490632	SCREW *For 967177008-01, 967045501-00*	1	-
34	874490512	BOLT	11	-
35	874780408	BOLT *For 967045501-00*	1	-
35	539990071	BOLT *For 967177008-01*	1	-
36	817120616	SCREW *For 967177007-01, 967045501-00*	4	-

Ref.	Article N.	Description	Qty	Kit
36	539990563	SCREW *For 967177008-01*	4	-
37	592858702	BOLT	8	-
38	817490406	SCREW *For 967177008-01*	1	-
38	539990302	HWST 1/4C X 3/8 *For 967177007-01*	1	-
39	539990613	NUT *For 967177007-01*	1	-
40	539112899	NUT, 5/16-18, NYLOC	15	-
41	521991101	NUT	1	-
42	539200282	NUT	4	-
43	521996501	NUT *For 967177008-01, 967045501-00*	2	-
44	539108120	NUT *For 967177007-01, 967177008-01*	4	-
45	539990053	WASHER	1	-
46	539115528	1/2` CONTACT BELLSPR	1	-
47	539990247	WASHER	1	-
48	539109562	WASHER	1	-
50	539109554	WASHER *For 967177007-01*	2	-
50	819182212	WASHER *For 967177008-01, 967045501-00*	2	-
51	539111897	WASHER	1	-
52	819141614	WASHER	1	-
53	539990118	WASHER *For 967177008-01, 967045501-00*	4	-
54	539990613	NUT *For 967177007-01*	1	-
54	521996501	NUT *For 967177008-01, 967045501-00*	2	-
55	532183906	SCREW *For 967177007-01*	4	-
55	532192334	SCREW *For 967045501-00*	4	-
91	501279301	HARNESS *For 967045501-00*	1	-
92	586839901	GASKET *For 967045501-00, NOT SHOWN*	2	-
93	587450101	HARNESS *For 967045501-00*	1	-

Ref.	Article N.	Description	Qty	Kit
94	574825801	KIT *For 967045501-00, SPARK ARRESTOR*	1	-
1	501656001	FRAME -	1	-
2	586893002	GUARD -	1	-
3	586867702	SUPPORT -	1	-
4	586560101	BRACKET -	1	-
5	586560201	BRACKET -	1	-
6	539132744	PLATE -	1	-
7	539132380	PLATE -	1	-
8	594037402	BRACKET *For all EXCEPT 967844201-00, BLK*	1	-
8	587048702	BRACKET *For 967844201-00*	1	-
9	575245202	BRACKET -	2	-
10	575533602	MOUNT -	2	-
11	900000002	DUMMY PART *For all EXCEPT 967844201-00, 593 79 55-05 Guard, Skid Gray*	1	-
11	575230402	SHIELD *For 967844201-00*	1	-
12	539132859	HEAT SHIELD -	1	-
13	587990501	CAP -	2	-
14	593634302	STOP *For all EXCEPT 967844201-00*	2	-
14	505256401	STOP *For 967844201-00*	2	-
15	539102587	ABSORBER -	7	-
16	539105974	GROMMET -	1	-
17	522801401	BUMPER *For 967844201-00*	2	-
17	874490644	BOLT	2	-

Ref.	Article N.	Description	Qty	Kit
		For 967844201-00		
18	539104411	KNOB -	1	-
19	539200715	PIN *For 967844201-00*	2	-
19	874490512	BOLT *For 967844201-00*	1	-
20	539133006	BOLT *For 967844201-00*	2	-
20	574388001	PIN *For 967844201-00*	2	-
21	539104763	CLIP *For 967844201-00*	5	-
22	539133006	BOLT *For 967844201-00*	2	-
22	525544001	BOLT *For 967844201-00*	1	-
23	874490644	BOLT *For 967844201-00*	2	-
23	539102335	BOLT *For 967844201-00*	2	-
24	874490512	BOLT *For 967844201-00*	18	-
24	539109117	BOLT *For all EXCEPT 967844201-00*	2	-
25	872140508	BOLT *For all EXCEPT 967844201-00*	3	-
25	874490560	BOLT *For 967844201-00*	4	-
26	525544001	BOLT *For 967844201-00*	1	-
26	872110606	BOLT *For all EXCEPT 967844201-00*	6	-
27	539102335	BOLT *For 967844201-00*	2	-
27	539200282	NUT *For 967844201-00*	6	-
28	874490560	BOLT *For 967844201-00*	4	-
28	580754601	BOLT *For 967844201-00*	6	-
29	872140506	BOLT *For 967844201-00*	6	-

Ref.	Article N.	Description	Qty	Kit
29	521996501	NUT *For all EXCEPT 967844201-00*	2	-
30	539990208	SCREW *For 967844201-00*	3	-
30	539112899	NUT, 5/16-18, NYLOC *For all EXCEPT 967844201-00*	12	-
31	539990645	BOLT -	2	-
32	539990316	BOLT *For 967844201-00*	4	-
32	819111116	WASHER *For all EXCEPT 967844201-00*	2	-
33	539200282	NUT *For 967844201-00*	6	-
33	539990250	WASHER *For all EXCEPT 967844201-00*	1	-
34	521996501	NUT *For all EXCEPT 967844201-00*	2	-
35	539112899	NUT, 5/16-18, NYLOC *For all EXCEPT 967844201-00*	13	-
36	525829101	NUT -	6	-
37	539976978	NUT *For 967844201-00*	2	-
37	873800400	NUT *For all EXCEPT 967844201-00*	4	-
38	819111116	WASHER *For all EXCEPT 967844201-00*	2	-
39	539990250	WASHER *For all EXCEPT 967844201-00*	1	-
40	819132416	WASHER -	2	-
41	539102653	WASHER *For 967844201-00*	4	-
42	539104763	CLIP *For 967844201-00*	8	-
43	539102653	WASHER *For 967844201-00*	4	-
62	575274801	KIT *For 967844201-00, NOT SHOWN PROTECTION FRAME*	1	-
1	586670402	PLATE	1	-
2	539976688	PULLEY	1	-
3	532175820	PULLEY	1	-

Ref.	Article N.	Description	Qty	Kit
4	510041603	ARM	1	-
5	574870901	DRIVE BELT	1	-
6	584994202	SHIELD	2	-
7	539102587	ABSORBER	2	-
8	510206301	PIVOT	1	-
9	525435601	PIVOT	1	-
10	539104763	CLIP	4	-
11	510254501	SHIELD	2	-
12	539114662	SHIELD, DUST	1	-
13	510254401	SPRING	1	-
14	872140610	BOLT	1	-
15	539130235	RHSNB 3/8-16 X 2.75 GR5 ZD	1	-
16	874490632	SCREW	1	-
17	874490512	BOLT	3	-
18	592858702	BOLT	9	-
19	874780852	BOLT	1	-
20	521991101	NUT	1	-
21	521996501	NUT	2	-
22	539112899	NUT, 5/16-18, NYLOC	5	-
23	539200282	NUT	4	-
24	539990613	NUT	1	-
25	539115528	1/2` CONTACT BELLSPR	1	-
26	819182212	WASHER	2	-
27	819141614	WASHER	1	-
28	539109562	WASHER	1	-
31	539111897	WASHER	1	-
1	574569101	TRANSMISSION *LEFT*	1	-
2	574569102	TRANSMISSION *RIGHT*	1	-
3	593278902	BRACKET *For 967177008-01, 967045501-00, 967844201-00*	1	-
3	575017102	BRACKET *For 967177007-01*	1	-
4	593279002	BRACKET *For 967177008-01, 967045501-00, 967844201-00*	1	-
4	575017002	BRACKET *For 967177007-01*	1	-
5	539131616	LINKAGE. LEFT BYPASS	1	-
6	539131618	LINKAGE	1	-

Ref.	Article N.	Description	Qty	Kit
7	574892101	HOSE ASSY	2	-
8	586067501	HOSE	1	-
9	585318201	TANK	1	-
10	584994202	SHIELD	2	-
11	539113466	OIL FILTER	2	-
12	530095646	FUEL FILTER	1	-
13	586072701	CAP	1	-
14	539976988	PIN	2	-
15	539102587	ABSORBER	2	-
16	539976988	PIN	2	-
17	539990643	BOLT	1	-
18	592858702	BOLT	9	-
19	539101721	SCREW *For 967177007-01*	4	-
19	539976978	NUT *For 967177008-01, 967045501-00, 967844201-00*	4	-
20	539112899	NUT, 5/16-18, NYLOC	2	-
21	574233801	SCREW	4	-
22	539990118	WASHER	4	-
23	539112899	NUT, 5/16-18, NYLOC	8	-
24	596204101	WASHER	2	-
25	539990118	WASHER	2	-
26	539990187	WASHER	4	-
27	539990055	WASHER	4	-
28	539990122	WASHER	2	-
1	585722303	FUEL TANK ASSY	1	-
2	539107593	CONSOLE	1	-
3	539102436	BATTERY	1	-
4	588107201	BRACKET *For 967045501-00, 967844201-00*	1	-
4	593634404	BRACKET *For 967177008-01*	1	-
4	510030001	BRACKET *For 967177007-01*	1	-
5	588030801	CABLE	1	-
6	588030701	CABLE	1	-
7	574841204	PLATE *For 967177007-01, 967045501-00, 967844201-00*	1	-
7	592877402	PLATE *For 967177008-01*	1	-

Ref.	Article N.	Description	Qty	Kit
8	582107602	SWITCH *For 967177007-01, 967177008-01, 967844201-00*	1	-
8	539131627	SWITCH *For 967045501-00*	1	-
9	574455401	SWITCH	1	-
10	581878301	LIGHT *For 967045501-00*	1	-
10	584971801	CHOKE *For 967844201-00*	1	-
10	574206903	CABLE *For 967177007-01, 967177008-01*	1	-
11	539102732	THROTTLE *For 967045501-00, 967844201-00*	1	-
11	539112438	THROTTLE CABLE *For 967177007-01, 967177008-01*	1	-
12	539133049	KNOB	1	-
13	586123901	FUEL HOSE *For 967177007-01, 967045501-00*	1	-
13	586123903	FUEL HOSE *For 967177008-01, 967844201-00*	1	-
14	576469201	FITTING	1	-
15	575018101	CAP	1	-
16	576618101	TANK VENT	1	-
17	539916325	VALVE *For 967844201-00*	1	-
18	576618201	GROMMET	1	-
19	539105245	GROMMET	1	-
20	539103178	NUT CAP	1	-
21	575436501	CLAMP	2	-
22	532123487	HOSE CLAMP *For 967844201-00*	4	-
23	587044810	HOSE *For 967844201-00*	2	-
24	587044539	HOSE *For 967045501-00*	1	-
24	587044536	HOSE *For 967177008-01, CUT TO LENGTH*	1	-
24	587044555	HOSE *For 967844201-00*	1	-
24	587044564	HOSE *For 967177007-01, CUT TO FIT*	1	-
25	574455501	KEY	1	-

Ref.	Article N.	Description	Qty	Kit
26	586161801	HOUR METER	1	-
28	582484201	SCREW	6	-
29	588843202	SUPPORT *For 967177008-01, 967844201-00*	2	-
29	539131671	SUPPORT *For 967177007-01, 967045501-00*	2	-
30	510064001	HOOK	2	-
31	532435395	TERMINAL COVER	1	-
32	539976934	SCREW *For 967177008-01, 967844201-00*	2	-
32	874780512	SCREW *For 967177007-01, 967045501-00*	2	-
33	872140506	BOLT *For 967177007-01, 967045501-00*	2	-
33	539990316	BOLT *For 967177008-01, 967844201-00*	2	-
34	539990411	SCREW *For 967045501-00, 967844201-00*	6	-
34	817490516	SCREW *For 967045501-00, 967844201-00*	3	-
35	539990411	SCREW *For 967045501-00, 967844201-00*	6	-
35	817490516	SCREW *For 967045501-00, 967844201-00*	3	-
36	539976977	NUT	2	-
37	539990997	NUT	2	-
38	539112899	NUT, 5/16-18, NYLOC	13	-
39	819070818	WASHER	4	-
40	819111116	WASHER	2	-
41	539990187	WASHER	2	-
42	532197802	SWITCH *For 967177008-01, 967177007-01*	1	-
42	539113792	SWITCH *For 967045501-00*	1	-
43	532109553	SWITCH *For 967177007-01, 967177008-01, 967045501-00*	2	-
44	581223001	PLATE *For 967177007-01, 967177008-01, 967045501-00*	2	-
45	574822701	SCREW *For 967177007-01, 967177008-01, 967045501-00*	4	-
63	589669901	HARNESS *For 967177007-01, 967844201-00*	1	-

Ref.	Article N.	Description	Qty	Kit
64	532409615	HARNESS *For 967177007-01, 967844201-00*	1	-
65	501279301	HARNESS *For 967045501-00*	1	-
66	900000002	DUMMY PART *For 967177008-01, 589 66 99-02 Harness w/Brake Switch*	1	-
1	581505401	DECK -	1	-
2	539104335	DRIVE BELT -	1	-
3	539113312	BLADE -	3	-
4	539131898	SPINDLE -	3	-
5	539103427	BUSHING -	1	-
6	539112169	BLADE BUSHING -	2	-
7	589766101	PULLEY -	3	-
8	539113300	PULLEY -	3	-
9	539112198	ARM -	1	-
10	539113319	SHIELD -	1	-
11	539113322	SHIELD -	1	-
12	584859402	BRACKET -	2	-
13	584859404	BRACKET -	2	-
14	539130901	CHUTE -	1	-
15	539113317	PLATE -	1	-
16	585323901	BEARING *For 967177008-01, 967045501-00*	3	-
16	532110485	BEARING *For 967177007-01, 967844201-00*	3	-
17	539103256	SPRING -	1	-
18	581606106	BRACKET	1	-

Ref.	Article N.	Description	Qty	Kit
		For 967844201-00		
18	581606102	BRACKET *For 967177007-01, 967177008-01, 967045501-00, ORG*	1	-
19	539130917	BRACKET -	1	-
20	532176066	ROLLER -	1	-
21	532179127	PIN -	1	-
22	539131859	PIN -	2	-
23	532133957	WHEEL -	2	-
24	539976998	NIPPLE -	1	-
25	876020412	SPLIT PIN -	2	-
26	581606102	BRACKET *For 967177007-01, 967177008-01, 967045501-00, ORG*	1	-
26	592964402	BRACKET *For 967177007-01, 967177008-01, 967045501-00*	1	-
27	532187291	SHAFT -	3	-
28	539104763	CLIP *For 967844201-00*	8	-
28	874780648	BOLT *For 967177007-01, 967177008-01, 967045501-00*	2	-
29	539108396	BOLT -	2	-
30	539990563	SCREW -	2	-
31	539976934	SCREW -	8	-
32	539990582	SCREW -	1	-
33	539103433	SCREW *For 967177007-01, 967844201-00*	1	-
33	589343201	MANDREL *For 967177008-01, 967045501-00*	1	-
34	874780520	BOLT -	2	-
35	539990799	BOLT -	3	-

Ref.	Article N.	Description	Qty	Kit
36	872110508	BOLT *For 967177007-01*	2	-
36	539107271	SCREW *For 967177008-01, 967045501-00, 967844201-00*	2	-
37	539100472	SCREW -	2	-
38	539102933	SCREW -	2	-
39	532193003	SCREW -	3	-
40	532137644	SCREW -	2	-
41	584953901	BOLT -	12	-
42	874780648	BOLT *For 967177007-01, 967177008-01, 967045501-00*	2	-
42	532400234	NUT *For 967177007-01, 967177008-01, 967045501-00*	3	-
43	539990717	NUT -	3	-
44	539990196	NUT -	2	-
45	539976979	NUT -	6	-
46	539101331	NUT *For 967177007-01*	1	-
46	873800800	NUT *For 967177008-01, 967045501-00, 967844201-00*	1	-
47	539112899	NUT, 5/16-18, NYLOC -	8	-
48	596134801	HEXAGON NUT -	3	-
49	539106504	WASHER -	2	-
50	819121414	WASHER *For 967844201-00*	10	-
50	539990692	WASHER *For 967177007-01, 967177008-01, 967045501-00*	11	-
51	539109600	WASHER -	8	-
52	539102243	WASHER -	1	-
53	539990550	WASHER	1	-

Ref.	Article N.	Description	Qty	Kit
		For 967177007-01		
53	819182212	WASHER *For 967177008-01, 967045501-00, 967844201-00*	1	-
54	532187690	WASHER -	3	-
55	819141614	WASHER -	3	-
1	510408301	PEDAL -	1	-
2	539110808	CROSS LINK -	2	-
3	586701701	SPACER -	2	-
4	539131861	SPACER. .3 -	1	-
5	586928702	LIFT -	1	-
6	584392702	PLATE -	2	-
7	539131897	BELLCRANK -	1	-
8	539131853	BELLCRANK -	1	-
9	588812102	BRACKET -	1	-
10	588812002	BRACKET -	1	-
11	539131566	LATCH -	1	-
12	539105059	ROPE -	1	-
13	539131791	MOUNT -	1	-
14	532195161	STUD -	4	-
15	539131792	SPRING -	1	-
16	539112896	BOLT -	1	-
17	539102642	SPRING -	1	-
18	539132734	SPRING. TORSION -	1	-

Ref.	Article N.	Description	Qty	Kit
19	539131850	HEIGHT. ADJUST. DECK -	1	-
20	539131860	PIVOT. LATCH. TRANSPORT -	1	-
21	539104808	SUPPORT -	4	-
22	539132182	PIN -	1	-
23	539132851	GRIP -	1	-
24	539115501	COTTER -	4	-
25	532194209	SPRING -	2	-
26	874780648	BOLT -	1	-
27	539990646	BOLT -	1	-
28	874780544	BOLT -	4	-
29	539108181	HCS 1/2-13 X 1-3/4 GR 8 ZD -	2	-
30	539990563	SCREW -	4	-
31	539112899	NUT, 5/16-18, NYLOC -	5	-
32	539976979	NUT -	4	-
33	873800800	NUT -	2	-
34	873900500	NUT -	2	-
35	539200282	NUT -	2	-
36	873900600	NUT -	4	-
37	819141614	WASHER -	1	-
38	539115528	1/2` CONTACT BELLSPR -	1	-
39	539109554	WASHER -	2	-
40	819191912	WASHER	2	-

Ref.	Article N.	Description	Qty	Kit
		-		
41	539991043	BUSHING -	10	-
1	510408301	PEDAL -	1	-
2	539110808	CROSS LINK -	2	-
3	586701701	SPACER -	2	-
4	539131861	SPACER. .3 -	1	-
5	586928702	LIFT -	1	-
6	584392702	PLATE -	2	-
7	539131897	BELLCRANK -	1	-
8	539131853	BELLCRANK -	1	-
9	539112223	STRUT -	2	-
10	539109693	LIFT CHAIN - 3 LINK -	4	-
11	539131566	LATCH -	1	-
12	539105059	ROPE -	1	-
13	539991043	BUSHING *For 967177007-01*	10	-
13	819211616	WASHER *For 967177008-01, 967045501-00*	1	-
14	539132017	MOUNT -	2	-
15	532194209	SPRING *For 967177008-01, 967045501-00*	1	-
16	539112896	BOLT -	1	-
17	539102642	SPRING *For 967177007-01*	1	-
17	539131790	SPRING *For 967177008-01, 967045501-00*	1	-
18	539132734	SPRING. TORSION -	1	-

Ref.	Article N.	Description	Qty	Kit
19	539131850	HEIGHT. ADJUST. DECK -	1	-
20	539131860	PIVOT. LATCH. TRANSPORT -	1	-
21	539104808	SUPPORT -	4	-
22	539132182	PIN -	1	-
24	539132851	GRIP -	1	-
25	539115501	COTTER -	6	-
26	874780544	BOLT *For 967177008-01, 967045501-00*	4	-
26	539101721	SCREW *For 967177007-01*	4	-
27	539108181	HCS 1/2-13 X 1-3/4 GR 8 ZD -	2	-
28	539976941	SCREW -	4	-
29	539101175	SCREW -	4	-
30	874780648	BOLT -	1	-
31	539990646	BOLT -	1	-
32	539108073	BOLT -	4	-
33	539200282	NUT -	2	-
34	539132019	NUT -	8	-
35	539102582	NUT -	8	-
36	539112899	NUT, 5/16-18, NYLOC *For 967177007-01*	5	-
37	539976979	NUT -	4	-
38	539101331	NUT *For 967177007-01*	1	-
38	873800800	NUT *For 967177008-01, 967045501-00*	1	-
39	819141614	WASHER	1	-

Ref.	Article N.	Description	Qty	Kit
		-		
40	539115528	1/2` CONTACT BELLSPR -	2	-
41	539109554	WASHER *For 967177007-01*	2	-
41	819182212	WASHER *For 967177008-01, 967045501-00*	2	-
42	539112899	NUT, 5/16-18, NYLOC *For 967177007-01*	5	-
43	539131791	MOUNT *For 967177007-01*	1	-
44	539131792	SPRING *For 967177007-01*	1	-
1	539132151	ARM -	1	-
2	539105036	GRIP -	1	-
3	575229602	BRACKET -	1	-
4	575229702	BRACKET -	1	-
5	586738802	LEVER -	1	-
6	575230201	SPRING -	2	-
7	575230301	SPRING -	2	-
8	586830002	MOUNT -	1	-
9	539132154	ACTUATOR -	1	-
10	539132153	BELLCRANK -	2	-
11	539132424	LINKAGE. BRAKE -	1	-
12	575229802	BRACKET -	2	-
13	539132161	BLADE BUSHING -	4	-
14	539104763	CLIP -	3	-
15	582121801	CABLE ASSY -	1	-

Ref.	Article N.	Description	Qty	Kit
16	582122001	CABLE ASSY -	2	-
17	505280001	TIE WRAP -	2	-
18	539990643	BOLT -	4	-
19	539108396	BOLT -	1	-
20	539990563	SCREW -	2	-
21	539990209	SCREW -	1	-
22	539110303	BOLT -	2	-
23	539990645	BOLT -	2	-
24	539990316	BOLT -	1	-
25	539131780	BOLT -	1	-
26	874490512	BOLT -	1	-
27	539112899	NUT, 5/16-18, NYLOC -	2	-
28	539990585	NUT -	5	-
29	539990717	NUT -	1	-
30	521996501	NUT -	2	-
31	539115617	NUT -	2	-
32	539200282	NUT -	2	-
33	539976978	NUT -	4	-
34	539107897	NUT -	2	-
35	539990055	WASHER -	8	-
36	539133007	WASHER -	1	-
37	539990122	WASHER	2	-

Ref.	Article N.	Description	Qty	Kit
		-		
38	819182212	WASHER -	1	-
39	532197802	SWITCH -	1	-
1	593564002	ARM -	1	-
2	539105036	GRIP -	1	-
3	593279202	BRACKET -	1	-
4	593279902	BRACKET -	1	-
5	590337701	GEAR -	1	-
6	575230201	SPRING -	2	-
7	575230301	SPRING -	2	-
8	590631502	MOUNT -	1	-
9	590204501	GEAR -	1	-
10	539990196	NUT -	2	-
11	596018303	BRACKET -	6	-
12	539104763	CLIP -	3	-
13	582121801	CABLE ASSY -	1	-
14	582122001	CABLE ASSY -	1	-
15	582121801	CABLE ASSY -	2	-
16	582122001	CABLE ASSY -	1	-
17	596018303	BRACKET -	1	-
18	593239802	ACTUATOR -	1	-
19	539990643	BOLT -	4	-

Ref.	Article N.	Description	Qty	Kit
20	539108396	BOLT -	1	-
21	525544001	BOLT -	3	-
22	539110303	BOLT -	2	-
23	539990645	BOLT -	2	-
24	539990316	BOLT -	1	-
25	539131780	BOLT -	1	-
26	874490512	BOLT -	1	-
27	525544001	BOLT -	1	-
28	539112899	NUT, 5/16-18, NYLOC -	1	-
29	539990585	NUT -	2	-
30	539990717	NUT -	1	-
31	521996501	NUT -	2	-
32	539115617	NUT -	2	-
33	539200282	NUT -	3	-
34	539976978	NUT -	4	-
35	539107897	NUT -	2	-
36	539990196	NUT -	2	-
37	539990055	WASHER -	8	-
38	819182212	WASHER -	1	-
39	539990122	WASHER -	2	-
40	819182212	WASHER -	1	-
41	595846701	BRAKE ASSY	1	-

Ref.	Article N.	Description	Qty	Kit
		NOT SHOWN		
1	501580402	SEAT -	1	-
2	539130359	BELT -	1	-
3	539103247	WIRE -	1	-
4	501762102	SUPPORT -	1	-
5	584916802	MOUNT -	2	-
6	587613301	SPRING -	2	-
7	539104763	CLIP -	8	-
8	539130793	STOP -	1	-
9	539119741	SWITCH -	1	-
10	584809102	SUPPORT -	1	-
11	584990102	SUPPORT -	1	-
12	584990202	SUPPORT -	1	-
13	539105974	GROMMET -	1	-
14	874490512	BOLT -	2	-
15	525544001	BOLT -	4	-
16	874490560	BOLT -	2	-
17	539990645	BOLT -	3	-
18	539115620	1/4-20X3/4 CARR BLT -	1	-
19	539130896	BOLT -	2	-
20	539112034	BOLT *For 967844201-00*	2	-
20	539124775	SCREW *For 967177007-01, 967177008-01, 967045501-00*	2	-

Ref.	Article N.	Description	Qty	Kit
21	872050506	BOLT *For 967844201-00*	2	-
22	539112899	NUT, 5/16-18, NYLOC -	9	-
23	539976979	NUT -	2	-
24	539990394	NUT -	2	-
25	539976978	NUT -	1	-
26	819141614	WASHER *For 967177007-01, 967177008-01, 967045501-00*	4	-
26	819091216	WASHER *For 967177007-01, 967177008-01, 967045501-00*	1	-
27	819141614	WASHER *For 967177007-01, 967177008-01, 967045501-00*	4	-
27	819091216	WASHER *For 967177007-01, 967177008-01, 967045501-00*	1	-
28	521996501	NUT *For 967177007-01, 967177008-01, 967045501-00*	1	-
29	873800500	LOCK NUT *For 967177007-01, 967177008-01, 967045501-00*	1	-
1	590090803	TUBE	1	-
2	590090804	TUBE	1	-
3	532109553	SWITCH	2	-
4	585124705	BRACKET	2	-
5	539438282	BEARING *For 967177007-01, 967177008-01, 967045501-00*	4	-
5	532438282	BEARING UNIT *For 967844201-00*	4	-
6	587187701	CONTROL	2	-
7	577420001	LEVER	2	-
8	584927201	SPACER	2	-
9	539102720	GAS SPRING	2	-
10	581437501	BLOCK	2	-
11	539102845	SPRING	2	-
12	576850301	SPRING	1	-
13	539131799	KNOB	1	-
14	574811401	ROD	2	-
15	539116689	ROD END COUPLER	2	-
16	588692502	ROD	2	-

Ref.	Article N.	Description	Qty	Kit
17	579764601	JOINT	2	-
18	581223001	PLATE *For 967844201-00*	2	-
19	576850402	SCREW *For 967177007-01, 967177008-01, 967045501-00*	2	-
19	539990585	NUT *For 967177007-01, 967177008-01, 967045501-00*	4	-
20	574822701	SCREW *For 967844201-00*	4	-
21	874780844	BOLT *For 967177007-01, 967177008-01, 967045501-00*	2	-
21	596580801	BOLT *NOTE: If you order 596580801 you will need to also order key 30 532423063 in the same quantity.*	1	-
22	874780844	BOLT *For 967177007-01, 967177008-01, 967045501-00*	2	-
22	539976935	SCREW *For 967177007-01, 967177008-01, 967045501-00*	4	-
23	539976935	SCREW *For 967177007-01, 967177008-01, 967045501-00*	4	-
23	525544001	BOLT *For 967177007-01, 967177008-01, 967045501-00*	4	-
24	525544001	BOLT *For 967177007-01, 967177008-01, 967045501-00*	4	-
24	874490512	BOLT *For 967177007-01, 967177008-01, 967045501-00*	8	-
25	576850402	SCREW *For 967177007-01, 967177008-01, 967045501-00*	2	-
25	874490512	BOLT *For 967177007-01, 967177008-01, 967045501-00*	8	-
26	539991073	NUT	2	-
27	539990585	NUT *For 967177007-01, 967177008-01, 967045501-00*	4	-
28	539990717	NUT *For 967177007-01, 967177008-01, 967045501-00*	6	-
28	539108010	NUT *For 967177007-01, 967177008-01, 967045501-00*	2	-
29	539990717	NUT *For 967177007-01, 967177008-01, 967045501-00*	4	-
29	539112899	NUT, 5/16-18, NYLOC *For 967177007-01, 967177008-01, 967045501-00*	10	-
30	819111116	WASHER *For 967177007-01, 967177008-01, 967045501-00*	12	-

Ref.	Article N.	Description	Qty	Kit
30	532423063	WASHER *NOTE: If you order 532423063 you will need to also order key 30 596580801 in the same quantity.*	1	-
31	539990223	NUT	4	-
32	819111116	WASHER *For 967177007-01, 967177008-01, 967045501-00*	14	-
33	539130894	GRIP *For 967177007-01, 967177008-01, 967045501-00*	2	-
34	874780520	BOLT *For 967177007-01, 967177008-01, 967045501-00*	5	-
35	539108010	NUT *For 967177007-01, 967177008-01, 967045501-00*	2	-
36	595305701	SCREW	2	-
1	586955401	WHEEL ASSY -	2	-
2	581199501	WHEEL ASSY -	2	-
3	582746401	TIRE -	2	-
3	539102543	BEARING -	4	-
4	539102535	CAP -	2	-
5	586921902	FORK -	2	-
6	539102851	SEALING -	2	-
7	575334901	SPACER -	2	-
8	539101474	NIPPLE -	2	-
9	539102889	SPLIT PIN -	2	-
10	539105517	BOLT -	2	-
11	539102852	NUT -	2	-
12	521991101	NUT -	2	-
13	587653902	NUT -	8	-
14	819182212	WASHER -	2	-

HYDRAULIC PUMP - MOTOR

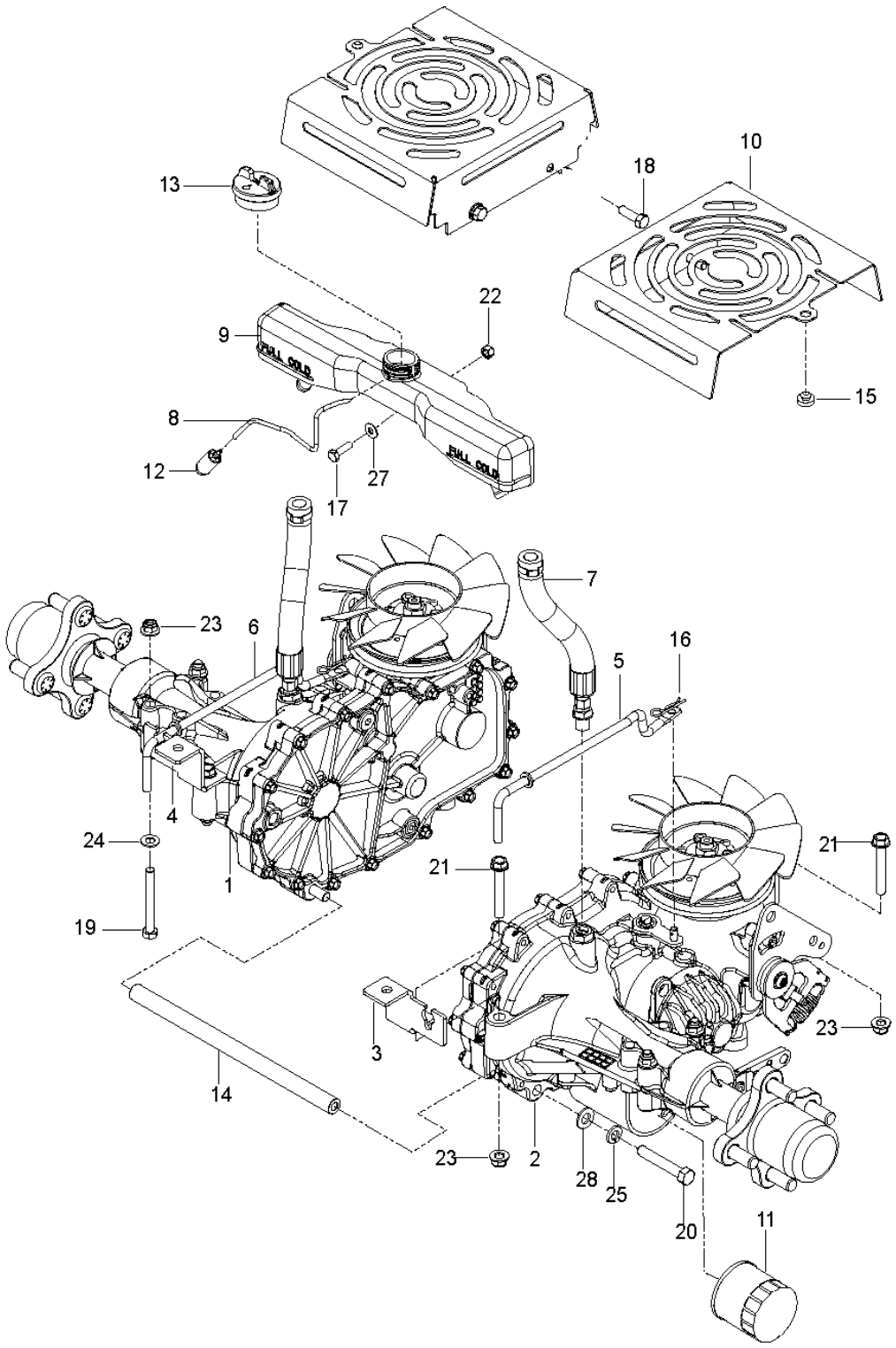

Ref.	Article N.	Description	Qty	Kit
1	586651402	PLATE -	1	-
2	574811001	PULLEY	1	-

Ref.	Article N.	Description	Qty	Kit
		-		
3	582042801	SOLENOID -	1	-
4	539101363	CLAMP -	1	-
5	584825501	HOSE ASSY -	1	-
6	575229902	BRACKET -	1	-
7	539102757	CABLE -	1	-
8	574607001	CLUTCH -	1	-
9	575017301	STOP -	1	-
10	539131604	MUFFLER ASSY -	1	-
11	583954501	TUBE -	1	-
12	583954801	TUBE -	1	-
13	586839701	GASKET -	2	-
14	532131563	COVER -	2	-
15	539102759	INSULATOR -	1	-
16	539912757	KEY -	1	-
17	539990071	BOLT -	1	-
18	817120616	SCREW -	4	-
19	539107271	SCREW -	2	-
20	874490512	BOLT -	8	-
21	581332802	BOLT -	1	-
22	539990302	HWST 1/4C X 3/8 -	1	-
23	539107475	BOLT -	2	-

Ref.	Article N.	Description	Qty	Kit
24	539108120	NUT -	4	-
25	539112899	NUT, 5/16-18, NYLOC -	10	-
26	539990053	WASHER -	1	-
27	539990247	WASHER -	1	-
1	586651402	PLATE	1	-
2	574846402	PLATE *For 967177008-01*	1	-
2	586670402	PLATE *For 967177007-01, 967045501-00*	1	-
3	574811001	PULLEY	1	-
4	539976688	PULLEY	1	-
5	532175820	PULLEY	1	-
6	574870901	DRIVE BELT	1	-
7	525435601	PIVOT	1	-
8	510206301	PIVOT	1	-
9	510041603	ARM	1	-
10	574607001	CLUTCH	1	-
11	575017302	STOP	1	-
12	539102757	CABLE *For 967177007-01, 967177008-01*	1	-
13	576701801	MUFFLER *For 967177007-01*	1	-
13	525750201	MUFFLER *For 967177008-01*	1	-
13	501451201	MUFFLER ASSY *For 967045501-00*	1	-
14	582042801	SOLENOID *For 967177007-01, 967177008-01*	1	-
15	510254401	SPRING	1	-
16	539114662	SHIELD, DUST	1	-
17	510254501	SHIELD	2	-
18	579150901	SHIELD *For 967177007-01, 967177008-01*	1	-
19	584825501	HOSE ASSY *For 967177008-01, 967045501-00*	1	-
20	522599001	ADAPTER *For 967177008-01*	1	-

Ref.	Article N.	Description	Qty	Kit
21	539101363	CLAMP *For 967177008-01, 967045501-00*	1	-
22	522837001	PLUG *For 967177008-01*	1	-
22	585807101	PLUG *For 967045501-00*	1	-
23	539912757	KEY	1	-
24	586839701	GASKET *For 967177007-01, 967177008-01*	2	-
25	532131563	COVER *For 967177007-01*	1	-
25	539102759	INSULATOR *For 967177008-01*	2	-
26	532131563	COVER *For 967177007-01*	2	-
27	539104763	CLIP	4	-
28	539100413	BOLT *For 967177007-01*	1	-
28	872140610	BOLT *For 967177008-01, 967045501-00*	1	-
29	872140622	BOLT *For 967045501-00*	1	-
29	539130235	RHSNB 3/8-16 X 2.75 GR5 ZD *For 967177007-01, 967177008-01*	1	-
30	872110508	BOLT *For 967177008-01*	2	-
31	581332802	BOLT	1	-
32	539103433	SCREW *For 967177007-01*	1	-
32	874780852	BOLT *For 967177008-01, 967045501-00*	1	-
33	525866201	BOLT *For 967177007-01*	1	-
33	874490632	SCREW *For 967177008-01, 967045501-00*	1	-
34	874490512	BOLT	11	-
35	874780408	BOLT *For 967045501-00*	1	-
35	539990071	BOLT *For 967177008-01*	1	-
36	817120616	SCREW *For 967177007-01, 967045501-00*	4	-

Ref.	Article N.	Description	Qty	Kit
36	539990563	SCREW *For 967177008-01*	4	-
37	592858702	BOLT	8	-
38	817490406	SCREW *For 967177008-01*	1	-
38	539990302	HWST 1/4C X 3/8 *For 967177007-01*	1	-
39	539990613	NUT *For 967177007-01*	1	-
40	539112899	NUT, 5/16-18, NYLOC	15	-
41	521991101	NUT	1	-
42	539200282	NUT	4	-
43	521996501	NUT *For 967177008-01, 967045501-00*	2	-
44	539108120	NUT *For 967177007-01, 967177008-01*	4	-
45	539990053	WASHER	1	-
46	539115528	1/2` CONTACT BELLSPR	1	-
47	539990247	WASHER	1	-
48	539109562	WASHER	1	-
50	539109554	WASHER *For 967177007-01*	2	-
50	819182212	WASHER *For 967177008-01, 967045501-00*	2	-
51	539111897	WASHER	1	-
52	819141614	WASHER	1	-
53	539990118	WASHER *For 967177008-01, 967045501-00*	4	-
54	539990613	NUT *For 967177007-01*	1	-
54	521996501	NUT *For 967177008-01, 967045501-00*	2	-
55	532183906	SCREW *For 967177007-01*	4	-
55	532192334	SCREW *For 967045501-00*	4	-
91	501279301	HARNESS *For 967045501-00*	1	-
92	586839901	GASKET *For 967045501-00, NOT SHOWN*	2	-
93	587450101	HARNESS *For 967045501-00*	1	-

Ref.	Article N.	Description	Qty	Kit
94	574825801	KIT *For 967045501-00, SPARK ARRESTOR*	1	-
1	501656001	FRAME -	1	-
2	586893002	GUARD -	1	-
3	586867702	SUPPORT -	1	-
4	586560101	BRACKET -	1	-
5	586560201	BRACKET -	1	-
6	539132744	PLATE -	1	-
7	539132380	PLATE -	1	-
8	594037402	BRACKET *For all EXCEPT 967844201-00, BLK*	1	-
8	587048702	BRACKET *For 967844201-00*	1	-
9	575245202	BRACKET -	2	-
10	575533602	MOUNT -	2	-
11	900000002	DUMMY PART *For all EXCEPT 967844201-00, 593 79 55-05 Guard, Skid Gray*	1	-
11	575230402	SHIELD *For 967844201-00*	1	-
12	539132859	HEAT SHIELD -	1	-
13	587990501	CAP -	2	-
14	593634302	STOP *For all EXCEPT 967844201-00*	2	-
14	505256401	STOP *For 967844201-00*	2	-
15	539102587	ABSORBER -	7	-
16	539105974	GROMMET -	1	-
17	522801401	BUMPER *For 967844201-00*	2	-
17	874490644	BOLT	2	-

Ref.	Article N.	Description	Qty	Kit
		For 967844201-00		
18	539104411	KNOB -	1	-
19	539200715	PIN *For 967844201-00*	2	-
19	874490512	BOLT *For 967844201-00*	1	-
20	539133006	BOLT *For 967844201-00*	2	-
20	574388001	PIN *For 967844201-00*	2	-
21	539104763	CLIP *For 967844201-00*	5	-
22	539133006	BOLT *For 967844201-00*	2	-
22	525544001	BOLT *For 967844201-00*	1	-
23	874490644	BOLT *For 967844201-00*	2	-
23	539102335	BOLT *For 967844201-00*	2	-
24	874490512	BOLT *For 967844201-00*	18	-
24	539109117	BOLT *For all EXCEPT 967844201-00*	2	-
25	872140508	BOLT *For all EXCEPT 967844201-00*	3	-
25	874490560	BOLT *For 967844201-00*	4	-
26	525544001	BOLT *For 967844201-00*	1	-
26	872110606	BOLT *For all EXCEPT 967844201-00*	6	-
27	539102335	BOLT *For 967844201-00*	2	-
27	539200282	NUT *For 967844201-00*	6	-
28	874490560	BOLT *For 967844201-00*	4	-
28	580754601	BOLT *For 967844201-00*	6	-
29	872140506	BOLT *For 967844201-00*	6	-

Ref.	Article N.	Description	Qty	Kit
29	521996501	NUT *For all EXCEPT 967844201-00*	2	-
30	539990208	SCREW *For 967844201-00*	3	-
30	539112899	NUT, 5/16-18, NYLOC *For all EXCEPT 967844201-00*	12	-
31	539990645	BOLT -	2	-
32	539990316	BOLT *For 967844201-00*	4	-
32	819111116	WASHER *For all EXCEPT 967844201-00*	2	-
33	539200282	NUT *For 967844201-00*	6	-
33	539990250	WASHER *For all EXCEPT 967844201-00*	1	-
34	521996501	NUT *For all EXCEPT 967844201-00*	2	-
35	539112899	NUT, 5/16-18, NYLOC *For all EXCEPT 967844201-00*	13	-
36	525829101	NUT -	6	-
37	539976978	NUT *For 967844201-00*	2	-
37	873800400	NUT *For all EXCEPT 967844201-00*	4	-
38	819111116	WASHER *For all EXCEPT 967844201-00*	2	-
39	539990250	WASHER *For all EXCEPT 967844201-00*	1	-
40	819132416	WASHER -	2	-
41	539102653	WASHER *For 967844201-00*	4	-
42	539104763	CLIP *For 967844201-00*	8	-
43	539102653	WASHER *For 967844201-00*	4	-
62	575274801	KIT *For 967844201-00, NOT SHOWN PROTECTION FRAME*	1	-
1	586670402	PLATE	1	-
2	539976688	PULLEY	1	-
3	532175820	PULLEY	1	-

Ref.	Article N.	Description	Qty	Kit
4	510041603	ARM	1	-
5	574870901	DRIVE BELT	1	-
6	584994202	SHIELD	2	-
7	539102587	ABSORBER	2	-
8	510206301	PIVOT	1	-
9	525435601	PIVOT	1	-
10	539104763	CLIP	4	-
11	510254501	SHIELD	2	-
12	539114662	SHIELD, DUST	1	-
13	510254401	SPRING	1	-
14	872140610	BOLT	1	-
15	539130235	RHSNB 3/8-16 X 2.75 GR5 ZD	1	-
16	874490632	SCREW	1	-
17	874490512	BOLT	3	-
18	592858702	BOLT	9	-
19	874780852	BOLT	1	-
20	521991101	NUT	1	-
21	521996501	NUT	2	-
22	539112899	NUT, 5/16-18, NYLOC	5	-
23	539200282	NUT	4	-
24	539990613	NUT	1	-
25	539115528	1/2` CONTACT BELLSPR	1	-
26	819182212	WASHER	2	-
27	819141614	WASHER	1	-
28	539109562	WASHER	1	-
31	539111897	WASHER	1	-
1	574569101	TRANSMISSION *LEFT*	1	-
2	574569102	TRANSMISSION *RIGHT*	1	-
3	593278902	BRACKET *For 967177008-01, 967045501-00, 967844201-00*	1	-
3	575017102	BRACKET *For 967177007-01*	1	-
4	593279002	BRACKET *For 967177008-01, 967045501-00, 967844201-00*	1	-
4	575017002	BRACKET *For 967177007-01*	1	-
5	539131616	LINKAGE. LEFT BYPASS	1	-
6	539131618	LINKAGE	1	-

Ref.	Article N.	Description	Qty	Kit
7	574892101	HOSE ASSY	2	-
8	586067501	HOSE	1	-
9	585318201	TANK	1	-
10	584994202	SHIELD	2	-
11	539113466	OIL FILTER	2	-
12	530095646	FUEL FILTER	1	-
13	586072701	CAP	1	-
14	539976988	PIN	2	-
15	539102587	ABSORBER	2	-
16	539976988	PIN	2	-
17	539990643	BOLT	1	-
18	592858702	BOLT	9	-
19	539101721	SCREW *For 967177007-01*	4	-
19	539976978	NUT *For 967177008-01, 967045501-00, 967844201-00*	4	-
20	539112899	NUT, 5/16-18, NYLOC	2	-
21	574233801	SCREW	4	-
22	539990118	WASHER	4	-
23	539112899	NUT, 5/16-18, NYLOC	8	-
24	596204101	WASHER	2	-
25	539990118	WASHER	2	-
26	539990187	WASHER	4	-
27	539990055	WASHER	4	-
28	539990122	WASHER	2	-
1	585722303	FUEL TANK ASSY	1	-
2	539107593	CONSOLE	1	-
3	539102436	BATTERY	1	-
4	588107201	BRACKET *For 967045501-00, 967844201-00*	1	-
4	593634404	BRACKET *For 967177008-01*	1	-
4	510030001	BRACKET *For 967177007-01*	1	-
5	588030801	CABLE	1	-
6	588030701	CABLE	1	-
7	574841204	PLATE *For 967177007-01, 967045501-00, 967844201-00*	1	-
7	592877402	PLATE *For 967177008-01*	1	-

Ref.	Article N.	Description	Qty	Kit
8	582107602	SWITCH *For 967177007-01, 967177008-01, 967844201-00*	1	-
8	539131627	SWITCH *For 967045501-00*	1	-
9	574455401	SWITCH	1	-
10	581878301	LIGHT *For 967045501-00*	1	-
10	584971801	CHOKE *For 967844201-00*	1	-
10	574206903	CABLE *For 967177007-01, 967177008-01*	1	-
11	539102732	THROTTLE *For 967045501-00, 967844201-00*	1	-
11	539112438	THROTTLE CABLE *For 967177007-01, 967177008-01*	1	-
12	539133049	KNOB	1	-
13	586123901	FUEL HOSE *For 967177007-01, 967045501-00*	1	-
13	586123903	FUEL HOSE *For 967177008-01, 967844201-00*	1	-
14	576469201	FITTING	1	-
15	575018101	CAP	1	-
16	576618101	TANK VENT	1	-
17	539916325	VALVE *For 967844201-00*	1	-
18	576618201	GROMMET	1	-
19	539105245	GROMMET	1	-
20	539103178	NUT CAP	1	-
21	575436501	CLAMP	2	-
22	532123487	HOSE CLAMP *For 967844201-00*	4	-
23	587044810	HOSE *For 967844201-00*	2	-
24	587044539	HOSE *For 967045501-00*	1	-
24	587044536	HOSE *For 967177008-01, CUT TO LENGTH*	1	-
24	587044555	HOSE *For 967844201-00*	1	-
24	587044564	HOSE *For 967177007-01, CUT TO FIT*	1	-
25	574455501	KEY	1	-

Ref.	Article N.	Description	Qty	Kit
26	586161801	HOUR METER	1	-
28	582484201	SCREW	6	-
29	588843202	SUPPORT *For 967177008-01, 967844201-00*	2	-
29	539131671	SUPPORT *For 967177007-01, 967045501-00*	2	-
30	510064001	HOOK	2	-
31	532435395	TERMINAL COVER	1	-
32	539976934	SCREW *For 967177008-01, 967844201-00*	2	-
32	874780512	SCREW *For 967177007-01, 967045501-00*	2	-
33	872140506	BOLT *For 967177007-01, 967045501-00*	2	-
33	539990316	BOLT *For 967177008-01, 967844201-00*	2	-
34	539990411	SCREW *For 967045501-00, 967844201-00*	6	-
34	817490516	SCREW *For 967045501-00, 967844201-00*	3	-
35	539990411	SCREW *For 967045501-00, 967844201-00*	6	-
35	817490516	SCREW *For 967045501-00, 967844201-00*	3	-
36	539976977	NUT	2	-
37	539990997	NUT	2	-
38	539112899	NUT, 5/16-18, NYLOC	13	-
39	819070818	WASHER	4	-
40	819111116	WASHER	2	-
41	539990187	WASHER	2	-
42	532197802	SWITCH *For 967177008-01, 967177007-01*	1	-
42	539113792	SWITCH *For 967045501-00*	1	-
43	532109553	SWITCH *For 967177007-01, 967177008-01, 967045501-00*	2	-
44	581223001	PLATE *For 967177007-01, 967177008-01, 967045501-00*	2	-
45	574822701	SCREW *For 967177007-01, 967177008-01, 967045501-00*	4	-
63	589669901	HARNESS *For 967177007-01, 967844201-00*	1	-

Ref.	Article N.	Description	Qty	Kit
64	532409615	HARNESS *For 967177007-01, 967844201-00*	1	-
65	501279301	HARNESS *For 967045501-00*	1	-
66	900000002	DUMMY PART *For 967177008-01, 589 66 99-02 Harness w/Brake Switch*	1	-
1	581505401	DECK -	1	-
2	539104335	DRIVE BELT -	1	-
3	539113312	BLADE -	3	-
4	539131898	SPINDLE -	3	-
5	539103427	BUSHING -	1	-
6	539112169	BLADE BUSHING -	2	-
7	589766101	PULLEY -	3	-
8	539113300	PULLEY -	3	-
9	539112198	ARM -	1	-
10	539113319	SHIELD -	1	-
11	539113322	SHIELD -	1	-
12	584859402	BRACKET -	2	-
13	584859404	BRACKET -	2	-
14	539130901	CHUTE -	1	-
15	539113317	PLATE -	1	-
16	585323901	BEARING *For 967177008-01, 967045501-00*	3	-
16	532110485	BEARING *For 967177007-01, 967844201-00*	3	-
17	539103256	SPRING -	1	-
18	581606106	BRACKET	1	-

Ref.	Article N.	Description	Qty	Kit
		For 967844201-00		
18	581606102	BRACKET *For 967177007-01, 967177008-01, 967045501-00, ORG*	1	-
19	539130917	BRACKET -	1	-
20	532176066	ROLLER -	1	-
21	532179127	PIN -	1	-
22	539131859	PIN -	2	-
23	532133957	WHEEL -	2	-
24	539976998	NIPPLE -	1	-
25	876020412	SPLIT PIN -	2	-
26	581606102	BRACKET *For 967177007-01, 967177008-01, 967045501-00, ORG*	1	-
26	592964402	BRACKET *For 967177007-01, 967177008-01, 967045501-00*	1	-
27	532187291	SHAFT -	3	-
28	539104763	CLIP *For 967844201-00*	8	-
28	874780648	BOLT *For 967177007-01, 967177008-01, 967045501-00*	2	-
29	539108396	BOLT -	2	-
30	539990563	SCREW -	2	-
31	539976934	SCREW -	8	-
32	539990582	SCREW -	1	-
33	539103433	SCREW *For 967177007-01, 967844201-00*	1	-
33	589343201	MANDREL *For 967177008-01, 967045501-00*	1	-
34	874780520	BOLT -	2	-
35	539990799	BOLT -	3	-

Ref.	Article N.	Description	Qty	Kit
36	872110508	BOLT *For 967177007-01*	2	-
36	539107271	SCREW *For 967177008-01, 967045501-00, 967844201-00*	2	-
37	539100472	SCREW -	2	-
38	539102933	SCREW -	2	-
39	532193003	SCREW -	3	-
40	532137644	SCREW -	2	-
41	584953901	BOLT -	12	-
42	874780648	BOLT *For 967177007-01, 967177008-01, 967045501-00*	2	-
42	532400234	NUT *For 967177007-01, 967177008-01, 967045501-00*	3	-
43	539990717	NUT -	3	-
44	539990196	NUT -	2	-
45	539976979	NUT -	6	-
46	539101331	NUT *For 967177007-01*	1	-
46	873800800	NUT *For 967177008-01, 967045501-00, 967844201-00*	1	-
47	539112899	NUT, 5/16-18, NYLOC -	8	-
48	596134801	HEXAGON NUT -	3	-
49	539106504	WASHER -	2	-
50	819121414	WASHER *For 967844201-00*	10	-
50	539990692	WASHER *For 967177007-01, 967177008-01, 967045501-00*	11	-
51	539109600	WASHER -	8	-
52	539102243	WASHER -	1	-
53	539990550	WASHER	1	-

Ref.	Article N.	Description	Qty	Kit
		For 967177007-01		
53	819182212	WASHER *For 967177008-01, 967045501-00, 967844201-00*	1	-
54	532187690	WASHER -	3	-
55	819141614	WASHER -	3	-
1	510408301	PEDAL -	1	-
2	539110808	CROSS LINK -	2	-
3	586701701	SPACER -	2	-
4	539131861	SPACER. .3 -	1	-
5	586928702	LIFT -	1	-
6	584392702	PLATE -	2	-
7	539131897	BELLCRANK -	1	-
8	539131853	BELLCRANK -	1	-
9	588812102	BRACKET -	1	-
10	588812002	BRACKET -	1	-
11	539131566	LATCH -	1	-
12	539105059	ROPE -	1	-
13	539131791	MOUNT -	1	-
14	532195161	STUD -	4	-
15	539131792	SPRING -	1	-
16	539112896	BOLT -	1	-
17	539102642	SPRING -	1	-
18	539132734	SPRING. TORSION -	1	-

Ref.	Article N.	Description	Qty	Kit
19	539131850	HEIGHT. ADJUST. DECK -	1	-
20	539131860	PIVOT. LATCH. TRANSPORT -	1	-
21	539104808	SUPPORT -	4	-
22	539132182	PIN -	1	-
23	539132851	GRIP -	1	-
24	539115501	COTTER -	4	-
25	532194209	SPRING -	2	-
26	874780648	BOLT -	1	-
27	539990646	BOLT -	1	-
28	874780544	BOLT -	4	-
29	539108181	HCS 1/2-13 X 1-3/4 GR 8 ZD -	2	-
30	539990563	SCREW -	4	-
31	539112899	NUT, 5/16-18, NYLOC -	5	-
32	539976979	NUT -	4	-
33	873800800	NUT -	2	-
34	873900500	NUT -	2	-
35	539200282	NUT -	2	-
36	873900600	NUT -	4	-
37	819141614	WASHER -	1	-
38	539115528	1/2` CONTACT BELLSPR -	1	-
39	539109554	WASHER -	2	-
40	819191912	WASHER	2	-

Ref.	Article N.	Description	Qty	Kit
		-		
41	539991043	BUSHING -	10	-
1	510408301	PEDAL -	1	-
2	539110808	CROSS LINK -	2	-
3	586701701	SPACER -	2	-
4	539131861	SPACER. .3 -	1	-
5	586928702	LIFT -	1	-
6	584392702	PLATE -	2	-
7	539131897	BELLCRANK -	1	-
8	539131853	BELLCRANK -	1	-
9	539112223	STRUT -	2	-
10	539109693	LIFT CHAIN - 3 LINK -	4	-
11	539131566	LATCH -	1	-
12	539105059	ROPE -	1	-
13	539991043	BUSHING *For 967177007-01*	10	-
13	819211616	WASHER *For 967177008-01, 967045501-00*	1	-
14	539132017	MOUNT -	2	-
15	532194209	SPRING *For 967177008-01, 967045501-00*	1	-
16	539112896	BOLT -	1	-
17	539102642	SPRING *For 967177007-01*	1	-
17	539131790	SPRING *For 967177008-01, 967045501-00*	1	-
18	539132734	SPRING. TORSION -	1	-

Ref.	Article N.	Description	Qty	Kit
19	539131850	HEIGHT. ADJUST. DECK -	1	-
20	539131860	PIVOT. LATCH. TRANSPORT -	1	-
21	539104808	SUPPORT -	4	-
22	539132182	PIN -	1	-
24	539132851	GRIP -	1	-
25	539115501	COTTER -	6	-
26	874780544	BOLT *For 967177008-01, 967045501-00*	4	-
26	539101721	SCREW *For 967177007-01*	4	-
27	539108181	HCS 1/2-13 X 1-3/4 GR 8 ZD -	2	-
28	539976941	SCREW -	4	-
29	539101175	SCREW -	4	-
30	874780648	BOLT -	1	-
31	539990646	BOLT -	1	-
32	539108073	BOLT -	4	-
33	539200282	NUT -	2	-
34	539132019	NUT -	8	-
35	539102582	NUT -	8	-
36	539112899	NUT, 5/16-18, NYLOC *For 967177007-01*	5	-
37	539976979	NUT -	4	-
38	539101331	NUT *For 967177007-01*	1	-
38	873800800	NUT *For 967177008-01, 967045501-00*	1	-
39	819141614	WASHER	1	-

Ref.	Article N.	Description	Qty	Kit
		-		
40	539115528	1/2` CONTACT BELLSPR -	2	-
41	539109554	WASHER *For 967177007-01*	2	-
41	819182212	WASHER *For 967177008-01, 967045501-00*	2	-
42	539112899	NUT, 5/16-18, NYLOC *For 967177007-01*	5	-
43	539131791	MOUNT *For 967177007-01*	1	-
44	539131792	SPRING *For 967177007-01*	1	-
1	539132151	ARM -	1	-
2	539105036	GRIP -	1	-
3	575229602	BRACKET -	1	-
4	575229702	BRACKET -	1	-
5	586738802	LEVER -	1	-
6	575230201	SPRING -	2	-
7	575230301	SPRING -	2	-
8	586830002	MOUNT -	1	-
9	539132154	ACTUATOR -	1	-
10	539132153	BELLCRANK -	2	-
11	539132424	LINKAGE. BRAKE -	1	-
12	575229802	BRACKET -	2	-
13	539132161	BLADE BUSHING -	4	-
14	539104763	CLIP -	3	-
15	582121801	CABLE ASSY -	1	-

Ref.	Article N.	Description	Qty	Kit
16	582122001	CABLE ASSY -	2	-
17	505280001	TIE WRAP -	2	-
18	539990643	BOLT -	4	-
19	539108396	BOLT -	1	-
20	539990563	SCREW -	2	-
21	539990209	SCREW -	1	-
22	539110303	BOLT -	2	-
23	539990645	BOLT -	2	-
24	539990316	BOLT -	1	-
25	539131780	BOLT -	1	-
26	874490512	BOLT -	1	-
27	539112899	NUT, 5/16-18, NYLOC -	2	-
28	539990585	NUT -	5	-
29	539990717	NUT -	1	-
30	521996501	NUT -	2	-
31	539115617	NUT -	2	-
32	539200282	NUT -	2	-
33	539976978	NUT -	4	-
34	539107897	NUT -	2	-
35	539990055	WASHER -	8	-
36	539133007	WASHER -	1	-
37	539990122	WASHER	2	-

Ref.	Article N.	Description	Qty	Kit
		-		
38	819182212	WASHER -	1	-
39	532197802	SWITCH -	1	-
1	593564002	ARM -	1	-
2	539105036	GRIP -	1	-
3	593279202	BRACKET -	1	-
4	593279902	BRACKET -	1	-
5	590337701	GEAR -	1	-
6	575230201	SPRING -	2	-
7	575230301	SPRING -	2	-
8	590631502	MOUNT -	1	-
9	590204501	GEAR -	1	-
10	539990196	NUT -	2	-
11	596018303	BRACKET -	6	-
12	539104763	CLIP -	3	-
13	582121801	CABLE ASSY -	1	-
14	582122001	CABLE ASSY -	1	-
15	582121801	CABLE ASSY -	2	-
16	582122001	CABLE ASSY -	1	-
17	596018303	BRACKET -	1	-
18	593239802	ACTUATOR -	1	-
19	539990643	BOLT -	4	-

Ref.	Article N.	Description	Qty	Kit
20	539108396	BOLT -	1	-
21	525544001	BOLT -	3	-
22	539110303	BOLT -	2	-
23	539990645	BOLT -	2	-
24	539990316	BOLT -	1	-
25	539131780	BOLT -	1	-
26	874490512	BOLT -	1	-
27	525544001	BOLT -	1	-
28	539112899	NUT, 5/16-18, NYLOC -	1	-
29	539990585	NUT -	2	-
30	539990717	NUT -	1	-
31	521996501	NUT -	2	-
32	539115617	NUT -	2	-
33	539200282	NUT -	3	-
34	539976978	NUT -	4	-
35	539107897	NUT -	2	-
36	539990196	NUT -	2	-
37	539990055	WASHER -	8	-
38	819182212	WASHER -	1	-
39	539990122	WASHER -	2	-
40	819182212	WASHER -	1	-
41	595846701	BRAKE ASSY	1	-

Ref.	Article N.	Description	Qty	Kit
		NOT SHOWN		
1	501580402	SEAT -	1	-
2	539130359	BELT -	1	-
3	539103247	WIRE -	1	-
4	501762102	SUPPORT -	1	-
5	584916802	MOUNT -	2	-
6	587613301	SPRING -	2	-
7	539104763	CLIP -	8	-
8	539130793	STOP -	1	-
9	539119741	SWITCH -	1	-
10	584809102	SUPPORT -	1	-
11	584990102	SUPPORT -	1	-
12	584990202	SUPPORT -	1	-
13	539105974	GROMMET -	1	-
14	874490512	BOLT -	2	-
15	525544001	BOLT -	4	-
16	874490560	BOLT -	2	-
17	539990645	BOLT -	3	-
18	539115620	1/4-20X3/4 CARR BLT -	1	-
19	539130896	BOLT -	2	-
20	539112034	BOLT *For 967844201-00*	2	-
20	539124775	SCREW *For 967177007-01, 967177008-01, 967045501-00*	2	-

Ref.	Article N.	Description	Qty	Kit
21	872050506	BOLT *For 967844201-00*	2	-
22	539112899	NUT, 5/16-18, NYLOC -	9	-
23	539976979	NUT -	2	-
24	539990394	NUT -	2	-
25	539976978	NUT -	1	-
26	819141614	WASHER *For 967177007-01, 967177008-01, 967045501-00*	4	-
26	819091216	WASHER *For 967177007-01, 967177008-01, 967045501-00*	1	-
27	819141614	WASHER *For 967177007-01, 967177008-01, 967045501-00*	4	-
27	819091216	WASHER *For 967177007-01, 967177008-01, 967045501-00*	1	-
28	521996501	NUT *For 967177007-01, 967177008-01, 967045501-00*	1	-
29	873800500	LOCK NUT *For 967177007-01, 967177008-01, 967045501-00*	1	-
1	590090803	TUBE	1	-
2	590090804	TUBE	1	-
3	532109553	SWITCH	2	-
4	585124705	BRACKET	2	-
5	539438282	BEARING *For 967177007-01, 967177008-01, 967045501-00*	4	-
5	532438282	BEARING UNIT *For 967844201-00*	4	-
6	587187701	CONTROL	2	-
7	577420001	LEVER	2	-
8	584927201	SPACER	2	-
9	539102720	GAS SPRING	2	-
10	581437501	BLOCK	2	-
11	539102845	SPRING	2	-
12	576850301	SPRING	1	-
13	539131799	KNOB	1	-
14	574811401	ROD	2	-
15	539116689	ROD END COUPLER	2	-
16	588692502	ROD	2	-

Ref.	Article N.	Description	Qty	Kit
17	579764601	JOINT	2	-
18	581223001	PLATE *For 967844201-00*	2	-
19	576850402	SCREW *For 967177007-01, 967177008-01, 967045501-00*	2	-
19	539990585	NUT *For 967177007-01, 967177008-01, 967045501-00*	4	-
20	574822701	SCREW *For 967844201-00*	4	-
21	874780844	BOLT *For 967177007-01, 967177008-01, 967045501-00*	2	-
21	596580801	BOLT *NOTE: If you order 596580801 you will need to also order key 30 532423063 in the same quantity.*	1	-
22	874780844	BOLT *For 967177007-01, 967177008-01, 967045501-00*	2	-
22	539976935	SCREW *For 967177007-01, 967177008-01, 967045501-00*	4	-
23	539976935	SCREW *For 967177007-01, 967177008-01, 967045501-00*	4	-
23	525544001	BOLT *For 967177007-01, 967177008-01, 967045501-00*	4	-
24	525544001	BOLT *For 967177007-01, 967177008-01, 967045501-00*	4	-
24	874490512	BOLT *For 967177007-01, 967177008-01, 967045501-00*	8	-
25	576850402	SCREW *For 967177007-01, 967177008-01, 967045501-00*	2	-
25	874490512	BOLT *For 967177007-01, 967177008-01, 967045501-00*	8	-
26	539991073	NUT	2	-
27	539990585	NUT *For 967177007-01, 967177008-01, 967045501-00*	4	-
28	539990717	NUT *For 967177007-01, 967177008-01, 967045501-00*	6	-
28	539108010	NUT *For 967177007-01, 967177008-01, 967045501-00*	2	-
29	539990717	NUT *For 967177007-01, 967177008-01, 967045501-00*	4	-
29	539112899	NUT, 5/16-18, NYLOC *For 967177007-01, 967177008-01, 967045501-00*	10	-
30	819111116	WASHER *For 967177007-01, 967177008-01, 967045501-00*	12	-

Ref.	Article N.	Description	Qty	Kit
30	532423063	WASHER *NOTE: If you order 532423063 you will need to also order key 30 596580801 in the same quantity.*	1	-
31	539990223	NUT	4	-
32	819111116	WASHER *For 967177007-01, 967177008-01, 967045501-00*	14	-
33	539130894	GRIP *For 967177007-01, 967177008-01, 967045501-00*	2	-
34	874780520	BOLT *For 967177007-01, 967177008-01, 967045501-00*	5	-
35	539108010	NUT *For 967177007-01, 967177008-01, 967045501-00*	2	-
36	595305701	SCREW	2	-
1	586955401	WHEEL ASSY -	2	-
2	581199501	WHEEL ASSY -	2	-
3	582746401	TIRE -	2	-
3	539102543	BEARING -	4	-
4	539102535	CAP -	2	-
5	586921902	FORK -	2	-
6	539102851	SEALING -	2	-
7	575334901	SPACER -	2	-
8	539101474	NIPPLE -	2	-
9	539102889	SPLIT PIN -	2	-
10	539105517	BOLT -	2	-
11	539102852	NUT -	2	-
12	521991101	NUT -	2	-
13	587653902	NUT -	8	-
14	819182212	WASHER -	2	-

IGNITION SYSTEM

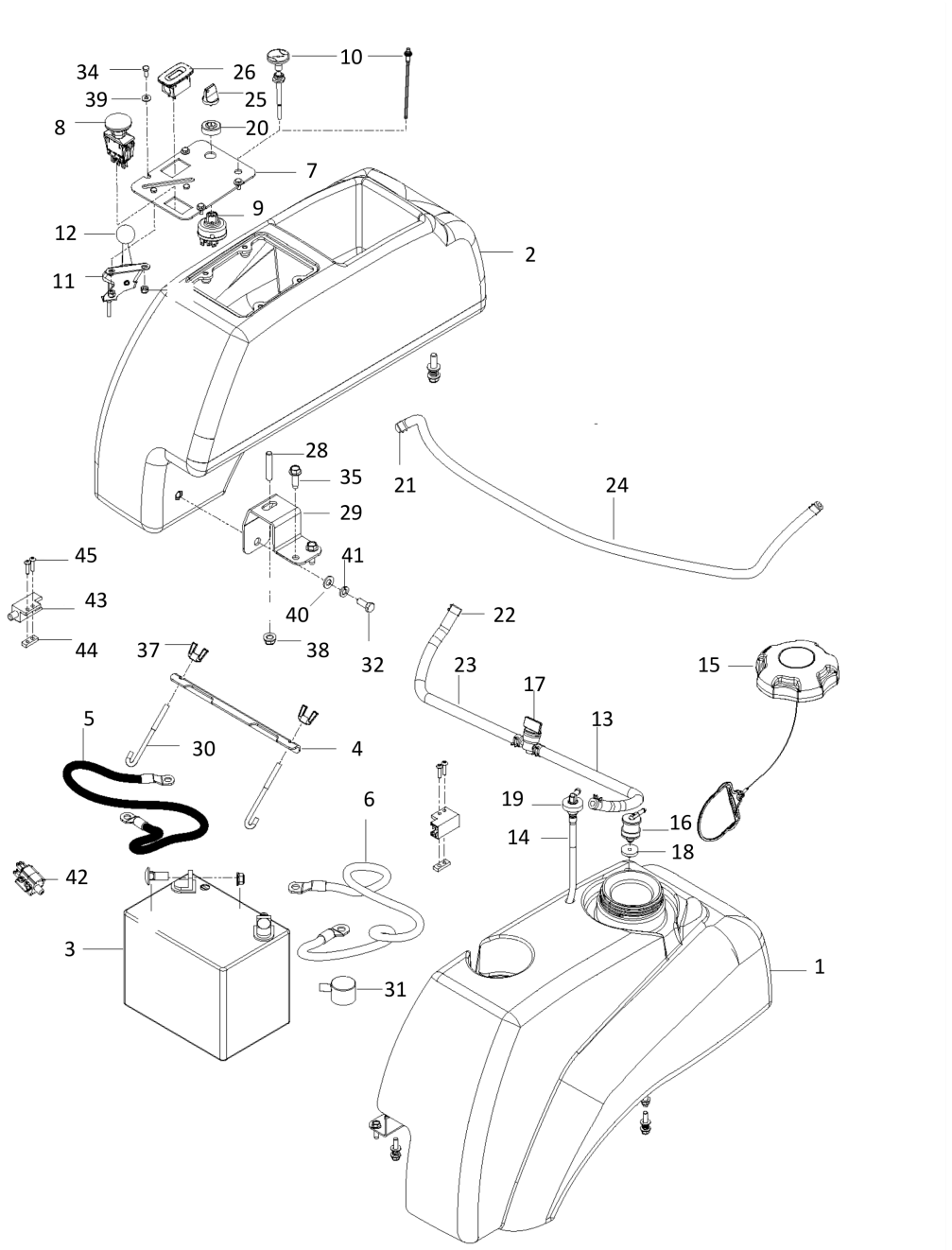

Ref.	Article N.	Description	Qty	Kit
1	586651402	PLATE -	1	-
2	574811001	PULLEY	1	-

Ref.	Article N.	Description	Qty	Kit
		-		
3	582042801	SOLENOID -	1	-
4	539101363	CLAMP -	1	-
5	584825501	HOSE ASSY -	1	-
6	575229902	BRACKET -	1	-
7	539102757	CABLE -	1	-
8	574607001	CLUTCH -	1	-
9	575017301	STOP -	1	-
10	539131604	MUFFLER ASSY -	1	-
11	583954501	TUBE -	1	-
12	583954801	TUBE -	1	-
13	586839701	GASKET -	2	-
14	532131563	COVER -	2	-
15	539102759	INSULATOR -	1	-
16	539912757	KEY -	1	-
17	539990071	BOLT -	1	-
18	817120616	SCREW -	4	-
19	539107271	SCREW -	2	-
20	874490512	BOLT -	8	-
21	581332802	BOLT -	1	-
22	539990302	HWST 1/4C X 3/8 -	1	-
23	539107475	BOLT -	2	-

Ref.	Article N.	Description	Qty	Kit
24	539108120	NUT -	4	-
25	539112899	NUT, 5/16-18, NYLOC -	10	-
26	539990053	WASHER -	1	-
27	539990247	WASHER -	1	-
1	586651402	PLATE	1	-
2	574846402	PLATE *For 967177008-01*	1	-
2	586670402	PLATE *For 967177007-01, 967045501-00*	1	-
3	574811001	PULLEY	1	-
4	539976688	PULLEY	1	-
5	532175820	PULLEY	1	-
6	574870901	DRIVE BELT	1	-
7	525435601	PIVOT	1	-
8	510206301	PIVOT	1	-
9	510041603	ARM	1	-
10	574607001	CLUTCH	1	-
11	575017302	STOP	1	-
12	539102757	CABLE *For 967177007-01, 967177008-01*	1	-
13	576701801	MUFFLER *For 967177007-01*	1	-
13	525750201	MUFFLER *For 967177008-01*	1	-
13	501451201	MUFFLER ASSY *For 967045501-00*	1	-
14	582042801	SOLENOID *For 967177007-01, 967177008-01*	1	-
15	510254401	SPRING	1	-
16	539114662	SHIELD, DUST	1	-
17	510254501	SHIELD	2	-
18	579150901	SHIELD *For 967177007-01, 967177008-01*	1	-
19	584825501	HOSE ASSY *For 967177008-01, 967045501-00*	1	-
20	522599001	ADAPTER *For 967177008-01*	1	-

Ref.	Article N.	Description	Qty	Kit
21	539101363	CLAMP *For 967177008-01, 967045501-00*	1	-
22	522837001	PLUG *For 967177008-01*	1	-
22	585807101	PLUG *For 967045501-00*	1	-
23	539912757	KEY	1	-
24	586839701	GASKET *For 967177007-01, 967177008-01*	2	-
25	532131563	COVER *For 967177007-01*	1	-
25	539102759	INSULATOR *For 967177008-01*	2	-
26	532131563	COVER *For 967177007-01*	2	-
27	539104763	CLIP	4	-
28	539100413	BOLT *For 967177007-01*	1	-
28	872140610	BOLT *For 967177008-01, 967045501-00*	1	-
29	872140622	BOLT *For 967045501-00*	1	-
29	539130235	RHSNB 3/8-16 X 2.75 GR5 ZD *For 967177007-01, 967177008-01*	1	-
30	872110508	BOLT *For 967177008-01*	2	-
31	581332802	BOLT	1	-
32	539103433	SCREW *For 967177007-01*	1	-
32	874780852	BOLT *For 967177008-01, 967045501-00*	1	-
33	525866201	BOLT *For 967177007-01*	1	-
33	874490632	SCREW *For 967177008-01, 967045501-00*	1	-
34	874490512	BOLT	11	-
35	874780408	BOLT *For 967045501-00*	1	-
35	539990071	BOLT *For 967177008-01*	1	-
36	817120616	SCREW *For 967177007-01, 967045501-00*	4	-

Ref.	Article N.	Description	Qty	Kit
36	539990563	SCREW *For 967177008-01*	4	-
37	592858702	BOLT	8	-
38	817490406	SCREW *For 967177008-01*	1	-
38	539990302	HWST 1/4C X 3/8 *For 967177007-01*	1	-
39	539990613	NUT *For 967177007-01*	1	-
40	539112899	NUT, 5/16-18, NYLOC	15	-
41	521991101	NUT	1	-
42	539200282	NUT	4	-
43	521996501	NUT *For 967177008-01, 967045501-00*	2	-
44	539108120	NUT *For 967177007-01, 967177008-01*	4	-
45	539990053	WASHER	1	-
46	539115528	1/2` CONTACT BELLSPR	1	-
47	539990247	WASHER	1	-
48	539109562	WASHER	1	-
50	539109554	WASHER *For 967177007-01*	2	-
50	819182212	WASHER *For 967177008-01, 967045501-00*	2	-
51	539111897	WASHER	1	-
52	819141614	WASHER	1	-
53	539990118	WASHER *For 967177008-01, 967045501-00*	4	-
54	539990613	NUT *For 967177007-01*	1	-
54	521996501	NUT *For 967177008-01, 967045501-00*	2	-
55	532183906	SCREW *For 967177007-01*	4	-
55	532192334	SCREW *For 967045501-00*	4	-
91	501279301	HARNESS *For 967045501-00*	1	-
92	586839901	GASKET *For 967045501-00, NOT SHOWN*	2	-
93	587450101	HARNESS *For 967045501-00*	1	-

Ref.	Article N.	Description	Qty	Kit
94	574825801	KIT *For 967045501-00, SPARK ARRESTOR*	1	-
1	501656001	FRAME -	1	-
2	586893002	GUARD -	1	-
3	586867702	SUPPORT -	1	-
4	586560101	BRACKET -	1	-
5	586560201	BRACKET -	1	-
6	539132744	PLATE -	1	-
7	539132380	PLATE -	1	-
8	594037402	BRACKET *For all EXCEPT 967844201-00, BLK*	1	-
8	587048702	BRACKET *For 967844201-00*	1	-
9	575245202	BRACKET -	2	-
10	575533602	MOUNT -	2	-
11	900000002	DUMMY PART *For all EXCEPT 967844201-00, 593 79 55-05 Guard, Skid Gray*	1	-
11	575230402	SHIELD *For 967844201-00*	1	-
12	539132859	HEAT SHIELD -	1	-
13	587990501	CAP -	2	-
14	593634302	STOP *For all EXCEPT 967844201-00*	2	-
14	505256401	STOP *For 967844201-00*	2	-
15	539102587	ABSORBER -	7	-
16	539105974	GROMMET -	1	-
17	522801401	BUMPER *For 967844201-00*	2	-
17	874490644	BOLT	2	-

Ref.	Article N.	Description	Qty	Kit
		For 967844201-00		
18	539104411	KNOB -	1	-
19	539200715	PIN *For 967844201-00*	2	-
19	874490512	BOLT *For 967844201-00*	1	-
20	539133006	BOLT *For 967844201-00*	2	-
20	574388001	PIN *For 967844201-00*	2	-
21	539104763	CLIP *For 967844201-00*	5	-
22	539133006	BOLT *For 967844201-00*	2	-
22	525544001	BOLT *For 967844201-00*	1	-
23	874490644	BOLT *For 967844201-00*	2	-
23	539102335	BOLT *For 967844201-00*	2	-
24	874490512	BOLT *For 967844201-00*	18	-
24	539109117	BOLT *For all EXCEPT 967844201-00*	2	-
25	872140508	BOLT *For all EXCEPT 967844201-00*	3	-
25	874490560	BOLT *For 967844201-00*	4	-
26	525544001	BOLT *For 967844201-00*	1	-
26	872110606	BOLT *For all EXCEPT 967844201-00*	6	-
27	539102335	BOLT *For 967844201-00*	2	-
27	539200282	NUT *For 967844201-00*	6	-
28	874490560	BOLT *For 967844201-00*	4	-
28	580754601	BOLT *For 967844201-00*	6	-
29	872140506	BOLT *For 967844201-00*	6	-

Ref.	Article N.	Description	Qty	Kit
29	521996501	NUT *For all EXCEPT 967844201-00*	2	-
30	539990208	SCREW *For 967844201-00*	3	-
30	539112899	NUT, 5/16-18, NYLOC *For all EXCEPT 967844201-00*	12	-
31	539990645	BOLT -	2	-
32	539990316	BOLT *For 967844201-00*	4	-
32	819111116	WASHER *For all EXCEPT 967844201-00*	2	-
33	539200282	NUT *For 967844201-00*	6	-
33	539990250	WASHER *For all EXCEPT 967844201-00*	1	-
34	521996501	NUT *For all EXCEPT 967844201-00*	2	-
35	539112899	NUT, 5/16-18, NYLOC *For all EXCEPT 967844201-00*	13	-
36	525829101	NUT -	6	-
37	539976978	NUT *For 967844201-00*	2	-
37	873800400	NUT *For all EXCEPT 967844201-00*	4	-
38	819111116	WASHER *For all EXCEPT 967844201-00*	2	-
39	539990250	WASHER *For all EXCEPT 967844201-00*	1	-
40	819132416	WASHER -	2	-
41	539102653	WASHER *For 967844201-00*	4	-
42	539104763	CLIP *For 967844201-00*	8	-
43	539102653	WASHER *For 967844201-00*	4	-
62	575274801	KIT *For 967844201-00, NOT SHOWN PROTECTION FRAME*	1	-
1	586670402	PLATE	1	-
2	539976688	PULLEY	1	-
3	532175820	PULLEY	1	-

Ref.	Article N.	Description	Qty	Kit
4	510041603	ARM	1	-
5	574870901	DRIVE BELT	1	-
6	584994202	SHIELD	2	-
7	539102587	ABSORBER	2	-
8	510206301	PIVOT	1	-
9	525435601	PIVOT	1	-
10	539104763	CLIP	4	-
11	510254501	SHIELD	2	-
12	539114662	SHIELD, DUST	1	-
13	510254401	SPRING	1	-
14	872140610	BOLT	1	-
15	539130235	RHSNB 3/8-16 X 2.75 GR5 ZD	1	-
16	874490632	SCREW	1	-
17	874490512	BOLT	3	-
18	592858702	BOLT	9	-
19	874780852	BOLT	1	-
20	521991101	NUT	1	-
21	521996501	NUT	2	-
22	539112899	NUT, 5/16-18, NYLOC	5	-
23	539200282	NUT	4	-
24	539990613	NUT	1	-
25	539115528	1/2` CONTACT BELLSPR	1	-
26	819182212	WASHER	2	-
27	819141614	WASHER	1	-
28	539109562	WASHER	1	-
31	539111897	WASHER	1	-
1	574569101	TRANSMISSION *LEFT*	1	-
2	574569102	TRANSMISSION *RIGHT*	1	-
3	593278902	BRACKET *For 967177008-01, 967045501-00, 967844201-00*	1	-
3	575017102	BRACKET *For 967177007-01*	1	-
4	593279002	BRACKET *For 967177008-01, 967045501-00, 967844201-00*	1	-
4	575017002	BRACKET *For 967177007-01*	1	-
5	539131616	LINKAGE. LEFT BYPASS	1	-
6	539131618	LINKAGE	1	-

Ref.	Article N.	Description	Qty	Kit
7	574892101	HOSE ASSY	2	-
8	586067501	HOSE	1	-
9	585318201	TANK	1	-
10	584994202	SHIELD	2	-
11	539113466	OIL FILTER	2	-
12	530095646	FUEL FILTER	1	-
13	586072701	CAP	1	-
14	539976988	PIN	2	-
15	539102587	ABSORBER	2	-
16	539976988	PIN	2	-
17	539990643	BOLT	1	-
18	592858702	BOLT	9	-
19	539101721	SCREW *For 967177007-01*	4	-
19	539976978	NUT *For 967177008-01, 967045501-00, 967844201-00*	4	-
20	539112899	NUT, 5/16-18, NYLOC	2	-
21	574233801	SCREW	4	-
22	539990118	WASHER	4	-
23	539112899	NUT, 5/16-18, NYLOC	8	-
24	596204101	WASHER	2	-
25	539990118	WASHER	2	-
26	539990187	WASHER	4	-
27	539990055	WASHER	4	-
28	539990122	WASHER	2	-
1	585722303	FUEL TANK ASSY	1	-
2	539107593	CONSOLE	1	-
3	539102436	BATTERY	1	-
4	588107201	BRACKET *For 967045501-00, 967844201-00*	1	-
4	593634404	BRACKET *For 967177008-01*	1	-
4	510030001	BRACKET *For 967177007-01*	1	-
5	588030801	CABLE	1	-
6	588030701	CABLE	1	-
7	574841204	PLATE *For 967177007-01, 967045501-00, 967844201-00*	1	-
7	592877402	PLATE *For 967177008-01*	1	-

Ref.	Article N.	Description	Qty	Kit
8	582107602	SWITCH *For 967177007-01, 967177008-01, 967844201-00*	1	-
8	539131627	SWITCH *For 967045501-00*	1	-
9	574455401	SWITCH	1	-
10	581878301	LIGHT *For 967045501-00*	1	-
10	584971801	CHOKE *For 967844201-00*	1	-
10	574206903	CABLE *For 967177007-01, 967177008-01*	1	-
11	539102732	THROTTLE *For 967045501-00, 967844201-00*	1	-
11	539112438	THROTTLE CABLE *For 967177007-01, 967177008-01*	1	-
12	539133049	KNOB	1	-
13	586123901	FUEL HOSE *For 967177007-01, 967045501-00*	1	-
13	586123903	FUEL HOSE *For 967177008-01, 967844201-00*	1	-
14	576469201	FITTING	1	-
15	575018101	CAP	1	-
16	576618101	TANK VENT	1	-
17	539916325	VALVE *For 967844201-00*	1	-
18	576618201	GROMMET	1	-
19	539105245	GROMMET	1	-
20	539103178	NUT CAP	1	-
21	575436501	CLAMP	2	-
22	532123487	HOSE CLAMP *For 967844201-00*	4	-
23	587044810	HOSE *For 967844201-00*	2	-
24	587044539	HOSE *For 967045501-00*	1	-
24	587044536	HOSE *For 967177008-01, CUT TO LENGTH*	1	-
24	587044555	HOSE *For 967844201-00*	1	-
24	587044564	HOSE *For 967177007-01, CUT TO FIT*	1	-
25	574455501	KEY	1	-

Ref.	Article N.	Description	Qty	Kit
26	586161801	HOUR METER	1	-
28	582484201	SCREW	6	-
29	588843202	SUPPORT *For 967177008-01, 967844201-00*	2	-
29	539131671	SUPPORT *For 967177007-01, 967045501-00*	2	-
30	510064001	HOOK	2	-
31	532435395	TERMINAL COVER	1	-
32	539976934	SCREW *For 967177008-01, 967844201-00*	2	-
32	874780512	SCREW *For 967177007-01, 967045501-00*	2	-
33	872140506	BOLT *For 967177007-01, 967045501-00*	2	-
33	539990316	BOLT *For 967177008-01, 967844201-00*	2	-
34	539990411	SCREW *For 967045501-00, 967844201-00*	6	-
34	817490516	SCREW *For 967045501-00, 967844201-00*	3	-
35	539990411	SCREW *For 967045501-00, 967844201-00*	6	-
35	817490516	SCREW *For 967045501-00, 967844201-00*	3	-
36	539976977	NUT	2	-
37	539990997	NUT	2	-
38	539112899	NUT, 5/16-18, NYLOC	13	-
39	819070818	WASHER	4	-
40	819111116	WASHER	2	-
41	539990187	WASHER	2	-
42	532197802	SWITCH *For 967177008-01, 967177007-01*	1	-
42	539113792	SWITCH *For 967045501-00*	1	-
43	532109553	SWITCH *For 967177007-01, 967177008-01, 967045501-00*	2	-
44	581223001	PLATE *For 967177007-01, 967177008-01, 967045501-00*	2	-
45	574822701	SCREW *For 967177007-01, 967177008-01, 967045501-00*	4	-
63	589669901	HARNESS *For 967177007-01, 967844201-00*	1	-

Ref.	Article N.	Description	Qty	Kit
64	532409615	HARNESS *For 967177007-01, 967844201-00*	1	-
65	501279301	HARNESS *For 967045501-00*	1	-
66	900000002	DUMMY PART *For 967177008-01, 589 66 99-02 Harness w/Brake Switch*	1	-
1	581505401	DECK -	1	-
2	539104335	DRIVE BELT -	1	-
3	539113312	BLADE -	3	-
4	539131898	SPINDLE -	3	-
5	539103427	BUSHING -	1	-
6	539112169	BLADE BUSHING -	2	-
7	589766101	PULLEY -	3	-
8	539113300	PULLEY -	3	-
9	539112198	ARM -	1	-
10	539113319	SHIELD -	1	-
11	539113322	SHIELD -	1	-
12	584859402	BRACKET -	2	-
13	584859404	BRACKET -	2	-
14	539130901	CHUTE -	1	-
15	539113317	PLATE -	1	-
16	585323901	BEARING *For 967177008-01, 967045501-00*	3	-
16	532110485	BEARING *For 967177007-01, 967844201-00*	3	-
17	539103256	SPRING -	1	-
18	581606106	BRACKET	1	-

Ref.	Article N.	Description	Qty	Kit
		For 967844201-00		
18	581606102	BRACKET *For 967177007-01, 967177008-01, 967045501-00, ORG*	1	-
19	539130917	BRACKET -	1	-
20	532176066	ROLLER -	1	-
21	532179127	PIN -	1	-
22	539131859	PIN -	2	-
23	532133957	WHEEL -	2	-
24	539976998	NIPPLE -	1	-
25	876020412	SPLIT PIN -	2	-
26	581606102	BRACKET *For 967177007-01, 967177008-01, 967045501-00, ORG*	1	-
26	592964402	BRACKET *For 967177007-01, 967177008-01, 967045501-00*	1	-
27	532187291	SHAFT -	3	-
28	539104763	CLIP *For 967844201-00*	8	-
28	874780648	BOLT *For 967177007-01, 967177008-01, 967045501-00*	2	-
29	539108396	BOLT -	2	-
30	539990563	SCREW -	2	-
31	539976934	SCREW -	8	-
32	539990582	SCREW -	1	-
33	539103433	SCREW *For 967177007-01, 967844201-00*	1	-
33	589343201	MANDREL *For 967177008-01, 967045501-00*	1	-
34	874780520	BOLT -	2	-
35	539990799	BOLT -	3	-

Ref.	Article N.	Description	Qty	Kit
36	872110508	BOLT *For 967177007-01*	2	-
36	539107271	SCREW *For 967177008-01, 967045501-00, 967844201-00*	2	-
37	539100472	SCREW -	2	-
38	539102933	SCREW -	2	-
39	532193003	SCREW -	3	-
40	532137644	SCREW -	2	-
41	584953901	BOLT -	12	-
42	874780648	BOLT *For 967177007-01, 967177008-01, 967045501-00*	2	-
42	532400234	NUT *For 967177007-01, 967177008-01, 967045501-00*	3	-
43	539990717	NUT -	3	-
44	539990196	NUT -	2	-
45	539976979	NUT -	6	-
46	539101331	NUT *For 967177007-01*	1	-
46	873800800	NUT *For 967177008-01, 967045501-00, 967844201-00*	1	-
47	539112899	NUT, 5/16-18, NYLOC -	8	-
48	596134801	HEXAGON NUT -	3	-
49	539106504	WASHER -	2	-
50	819121414	WASHER *For 967844201-00*	10	-
50	539990692	WASHER *For 967177007-01, 967177008-01, 967045501-00*	11	-
51	539109600	WASHER -	8	-
52	539102243	WASHER -	1	-
53	539990550	WASHER	1	-

Ref.	Article N.	Description	Qty	Kit
		For 967177007-01		
53	819182212	WASHER *For 967177008-01, 967045501-00, 967844201-00*	1	-
54	532187690	WASHER -	3	-
55	819141614	WASHER -	3	-
1	510408301	PEDAL -	1	-
2	539110808	CROSS LINK -	2	-
3	586701701	SPACER -	2	-
4	539131861	SPACER. .3 -	1	-
5	586928702	LIFT -	1	-
6	584392702	PLATE -	2	-
7	539131897	BELLCRANK -	1	-
8	539131853	BELLCRANK -	1	-
9	588812102	BRACKET -	1	-
10	588812002	BRACKET -	1	-
11	539131566	LATCH -	1	-
12	539105059	ROPE -	1	-
13	539131791	MOUNT -	1	-
14	532195161	STUD -	4	-
15	539131792	SPRING -	1	-
16	539112896	BOLT -	1	-
17	539102642	SPRING -	1	-
18	539132734	SPRING. TORSION -	1	-

Ref.	Article N.	Description	Qty	Kit
19	539131850	HEIGHT. ADJUST. DECK -	1	-
20	539131860	PIVOT. LATCH. TRANSPORT -	1	-
21	539104808	SUPPORT -	4	-
22	539132182	PIN -	1	-
23	539132851	GRIP -	1	-
24	539115501	COTTER -	4	-
25	532194209	SPRING -	2	-
26	874780648	BOLT -	1	-
27	539990646	BOLT -	1	-
28	874780544	BOLT -	4	-
29	539108181	HCS 1/2-13 X 1-3/4 GR 8 ZD -	2	-
30	539990563	SCREW -	4	-
31	539112899	NUT, 5/16-18, NYLOC -	5	-
32	539976979	NUT -	4	-
33	873800800	NUT -	2	-
34	873900500	NUT -	2	-
35	539200282	NUT -	2	-
36	873900600	NUT -	4	-
37	819141614	WASHER -	1	-
38	539115528	1/2` CONTACT BELLSPR -	1	-
39	539109554	WASHER -	2	-
40	819191912	WASHER	2	-

Ref.	Article N.	Description	Qty	Kit
		-		
41	539991043	BUSHING -	10	-
1	510408301	PEDAL -	1	-
2	539110808	CROSS LINK -	2	-
3	586701701	SPACER -	2	-
4	539131861	SPACER. .3 -	1	-
5	586928702	LIFT -	1	-
6	584392702	PLATE -	2	-
7	539131897	BELLCRANK -	1	-
8	539131853	BELLCRANK -	1	-
9	539112223	STRUT -	2	-
10	539109693	LIFT CHAIN - 3 LINK -	4	-
11	539131566	LATCH -	1	-
12	539105059	ROPE -	1	-
13	539991043	BUSHING *For 967177007-01*	10	-
13	819211616	WASHER *For 967177008-01, 967045501-00*	1	-
14	539132017	MOUNT -	2	-
15	532194209	SPRING *For 967177008-01, 967045501-00*	1	-
16	539112896	BOLT -	1	-
17	539102642	SPRING *For 967177007-01*	1	-
17	539131790	SPRING *For 967177008-01, 967045501-00*	1	-
18	539132734	SPRING. TORSION -	1	-

Ref.	Article N.	Description	Qty	Kit
19	539131850	HEIGHT. ADJUST. DECK -	1	-
20	539131860	PIVOT. LATCH. TRANSPORT -	1	-
21	539104808	SUPPORT -	4	-
22	539132182	PIN -	1	-
24	539132851	GRIP -	1	-
25	539115501	COTTER -	6	-
26	874780544	BOLT *For 967177008-01, 967045501-00*	4	-
26	539101721	SCREW *For 967177007-01*	4	-
27	539108181	HCS 1/2-13 X 1-3/4 GR 8 ZD -	2	-
28	539976941	SCREW -	4	-
29	539101175	SCREW -	4	-
30	874780648	BOLT -	1	-
31	539990646	BOLT -	1	-
32	539108073	BOLT -	4	-
33	539200282	NUT -	2	-
34	539132019	NUT -	8	-
35	539102582	NUT -	8	-
36	539112899	NUT, 5/16-18, NYLOC *For 967177007-01*	5	-
37	539976979	NUT -	4	-
38	539101331	NUT *For 967177007-01*	1	-
38	873800800	NUT *For 967177008-01, 967045501-00*	1	-
39	819141614	WASHER	1	-

Ref.	Article N.	Description	Qty	Kit
		-		
40	539115528	1/2` CONTACT BELLSPR -	2	-
41	539109554	WASHER *For 967177007-01*	2	-
41	819182212	WASHER *For 967177008-01, 967045501-00*	2	-
42	539112899	NUT, 5/16-18, NYLOC *For 967177007-01*	5	-
43	539131791	MOUNT *For 967177007-01*	1	-
44	539131792	SPRING *For 967177007-01*	1	-
1	539132151	ARM -	1	-
2	539105036	GRIP -	1	-
3	575229602	BRACKET -	1	-
4	575229702	BRACKET -	1	-
5	586738802	LEVER -	1	-
6	575230201	SPRING -	2	-
7	575230301	SPRING -	2	-
8	586830002	MOUNT -	1	-
9	539132154	ACTUATOR -	1	-
10	539132153	BELLCRANK -	2	-
11	539132424	LINKAGE. BRAKE -	1	-
12	575229802	BRACKET -	2	-
13	539132161	BLADE BUSHING -	4	-
14	539104763	CLIP -	3	-
15	582121801	CABLE ASSY -	1	-

Ref.	Article N.	Description	Qty	Kit
16	582122001	CABLE ASSY -	2	-
17	505280001	TIE WRAP -	2	-
18	539990643	BOLT -	4	-
19	539108396	BOLT -	1	-
20	539990563	SCREW -	2	-
21	539990209	SCREW -	1	-
22	539110303	BOLT -	2	-
23	539990645	BOLT -	2	-
24	539990316	BOLT -	1	-
25	539131780	BOLT -	1	-
26	874490512	BOLT -	1	-
27	539112899	NUT, 5/16-18, NYLOC -	2	-
28	539990585	NUT -	5	-
29	539990717	NUT -	1	-
30	521996501	NUT -	2	-
31	539115617	NUT -	2	-
32	539200282	NUT -	2	-
33	539976978	NUT -	4	-
34	539107897	NUT -	2	-
35	539990055	WASHER -	8	-
36	539133007	WASHER -	1	-
37	539990122	WASHER	2	-

Ref.	Article N.	Description	Qty	Kit
		-		
38	819182212	WASHER -	1	-
39	532197802	SWITCH -	1	-
1	593564002	ARM -	1	-
2	539105036	GRIP -	1	-
3	593279202	BRACKET -	1	-
4	593279902	BRACKET -	1	-
5	590337701	GEAR -	1	-
6	575230201	SPRING -	2	-
7	575230301	SPRING -	2	-
8	590631502	MOUNT -	1	-
9	590204501	GEAR -	1	-
10	539990196	NUT -	2	-
11	596018303	BRACKET -	6	-
12	539104763	CLIP -	3	-
13	582121801	CABLE ASSY -	1	-
14	582122001	CABLE ASSY -	1	-
15	582121801	CABLE ASSY -	2	-
16	582122001	CABLE ASSY -	1	-
17	596018303	BRACKET -	1	-
18	593239802	ACTUATOR -	1	-
19	539990643	BOLT -	4	-

Ref.	Article N.	Description	Qty	Kit
20	539108396	BOLT -	1	-
21	525544001	BOLT -	3	-
22	539110303	BOLT -	2	-
23	539990645	BOLT -	2	-
24	539990316	BOLT -	1	-
25	539131780	BOLT -	1	-
26	874490512	BOLT -	1	-
27	525544001	BOLT -	1	-
28	539112899	NUT, 5/16-18, NYLOC -	1	-
29	539990585	NUT -	2	-
30	539990717	NUT -	1	-
31	521996501	NUT -	2	-
32	539115617	NUT -	2	-
33	539200282	NUT -	3	-
34	539976978	NUT -	4	-
35	539107897	NUT -	2	-
36	539990196	NUT -	2	-
37	539990055	WASHER -	8	-
38	819182212	WASHER -	1	-
39	539990122	WASHER -	2	-
40	819182212	WASHER -	1	-
41	595846701	BRAKE ASSY	1	-

Ref.	Article N.	Description	Qty	Kit
		NOT SHOWN		
1	501580402	SEAT -	1	-
2	539130359	BELT -	1	-
3	539103247	WIRE -	1	-
4	501762102	SUPPORT -	1	-
5	584916802	MOUNT -	2	-
6	587613301	SPRING -	2	-
7	539104763	CLIP -	8	-
8	539130793	STOP -	1	-
9	539119741	SWITCH -	1	-
10	584809102	SUPPORT -	1	-
11	584990102	SUPPORT -	1	-
12	584990202	SUPPORT -	1	-
13	539105974	GROMMET -	1	-
14	874490512	BOLT -	2	-
15	525544001	BOLT -	4	-
16	874490560	BOLT -	2	-
17	539990645	BOLT -	3	-
18	539115620	1/4-20X3/4 CARR BLT -	1	-
19	539130896	BOLT -	2	-
20	539112034	BOLT *For 967844201-00*	2	-
20	539124775	SCREW *For 967177007-01, 967177008-01, 967045501-00*	2	-

Ref.	Article N.	Description	Qty	Kit
21	872050506	BOLT *For 967844201-00*	2	-
22	539112899	NUT, 5/16-18, NYLOC -	9	-
23	539976979	NUT -	2	-
24	539990394	NUT -	2	-
25	539976978	NUT -	1	-
26	819141614	WASHER *For 967177007-01, 967177008-01, 967045501-00*	4	-
26	819091216	WASHER *For 967177007-01, 967177008-01, 967045501-00*	1	-
27	819141614	WASHER *For 967177007-01, 967177008-01, 967045501-00*	4	-
27	819091216	WASHER *For 967177007-01, 967177008-01, 967045501-00*	1	-
28	521996501	NUT *For 967177007-01, 967177008-01, 967045501-00*	1	-
29	873800500	LOCK NUT *For 967177007-01, 967177008-01, 967045501-00*	1	-
1	590090803	TUBE	1	-
2	590090804	TUBE	1	-
3	532109553	SWITCH	2	-
4	585124705	BRACKET	2	-
5	539438282	BEARING *For 967177007-01, 967177008-01, 967045501-00*	4	-
5	532438282	BEARING UNIT *For 967844201-00*	4	-
6	587187701	CONTROL	2	-
7	577420001	LEVER	2	-
8	584927201	SPACER	2	-
9	539102720	GAS SPRING	2	-
10	581437501	BLOCK	2	-
11	539102845	SPRING	2	-
12	576850301	SPRING	1	-
13	539131799	KNOB	1	-
14	574811401	ROD	2	-
15	539116689	ROD END COUPLER	2	-
16	588692502	ROD	2	-

Ref.	Article N.	Description	Qty	Kit
17	579764601	JOINT	2	-
18	581223001	PLATE *For 967844201-00*	2	-
19	576850402	SCREW *For 967177007-01, 967177008-01, 967045501-00*	2	-
19	539990585	NUT *For 967177007-01, 967177008-01, 967045501-00*	4	-
20	574822701	SCREW *For 967844201-00*	4	-
21	874780844	BOLT *For 967177007-01, 967177008-01, 967045501-00*	2	-
21	596580801	BOLT *NOTE: If you order 596580801 you will need to also order key 30 532423063 in the same quantity.*	1	-
22	874780844	BOLT *For 967177007-01, 967177008-01, 967045501-00*	2	-
22	539976935	SCREW *For 967177007-01, 967177008-01, 967045501-00*	4	-
23	539976935	SCREW *For 967177007-01, 967177008-01, 967045501-00*	4	-
23	525544001	BOLT *For 967177007-01, 967177008-01, 967045501-00*	4	-
24	525544001	BOLT *For 967177007-01, 967177008-01, 967045501-00*	4	-
24	874490512	BOLT *For 967177007-01, 967177008-01, 967045501-00*	8	-
25	576850402	SCREW *For 967177007-01, 967177008-01, 967045501-00*	2	-
25	874490512	BOLT *For 967177007-01, 967177008-01, 967045501-00*	8	-
26	539991073	NUT	2	-
27	539990585	NUT *For 967177007-01, 967177008-01, 967045501-00*	4	-
28	539990717	NUT *For 967177007-01, 967177008-01, 967045501-00*	6	-
28	539108010	NUT *For 967177007-01, 967177008-01, 967045501-00*	2	-
29	539990717	NUT *For 967177007-01, 967177008-01, 967045501-00*	4	-
29	539112899	NUT, 5/16-18, NYLOC *For 967177007-01, 967177008-01, 967045501-00*	10	-
30	819111116	WASHER *For 967177007-01, 967177008-01, 967045501-00*	12	-

Ref.	Article N.	Description	Qty	Kit
30	532423063	WASHER *NOTE: If you order 532423063 you will need to also order key 30 596580801 in the same quantity.*	1	-
31	539990223	NUT	4	-
32	819111116	WASHER *For 967177007-01, 967177008-01, 967045501-00*	14	-
33	539130894	GRIP *For 967177007-01, 967177008-01, 967045501-00*	2	-
34	874780520	BOLT *For 967177007-01, 967177008-01, 967045501-00*	5	-
35	539108010	NUT *For 967177007-01, 967177008-01, 967045501-00*	2	-
36	595305701	SCREW	2	-
1	586955401	WHEEL ASSY -	2	-
2	581199501	WHEEL ASSY -	2	-
3	582746401	TIRE -	2	-
3	539102543	BEARING -	4	-
4	539102535	CAP -	2	-
5	586921902	FORK -	2	-
6	539102851	SEALING -	2	-
7	575334901	SPACER -	2	-
8	539101474	NIPPLE -	2	-
9	539102889	SPLIT PIN -	2	-
10	539105517	BOLT -	2	-
11	539102852	NUT -	2	-
12	521991101	NUT -	2	-
13	587653902	NUT -	8	-
14	819182212	WASHER -	2	-

MOWER DECK \/ CUTTING DECK

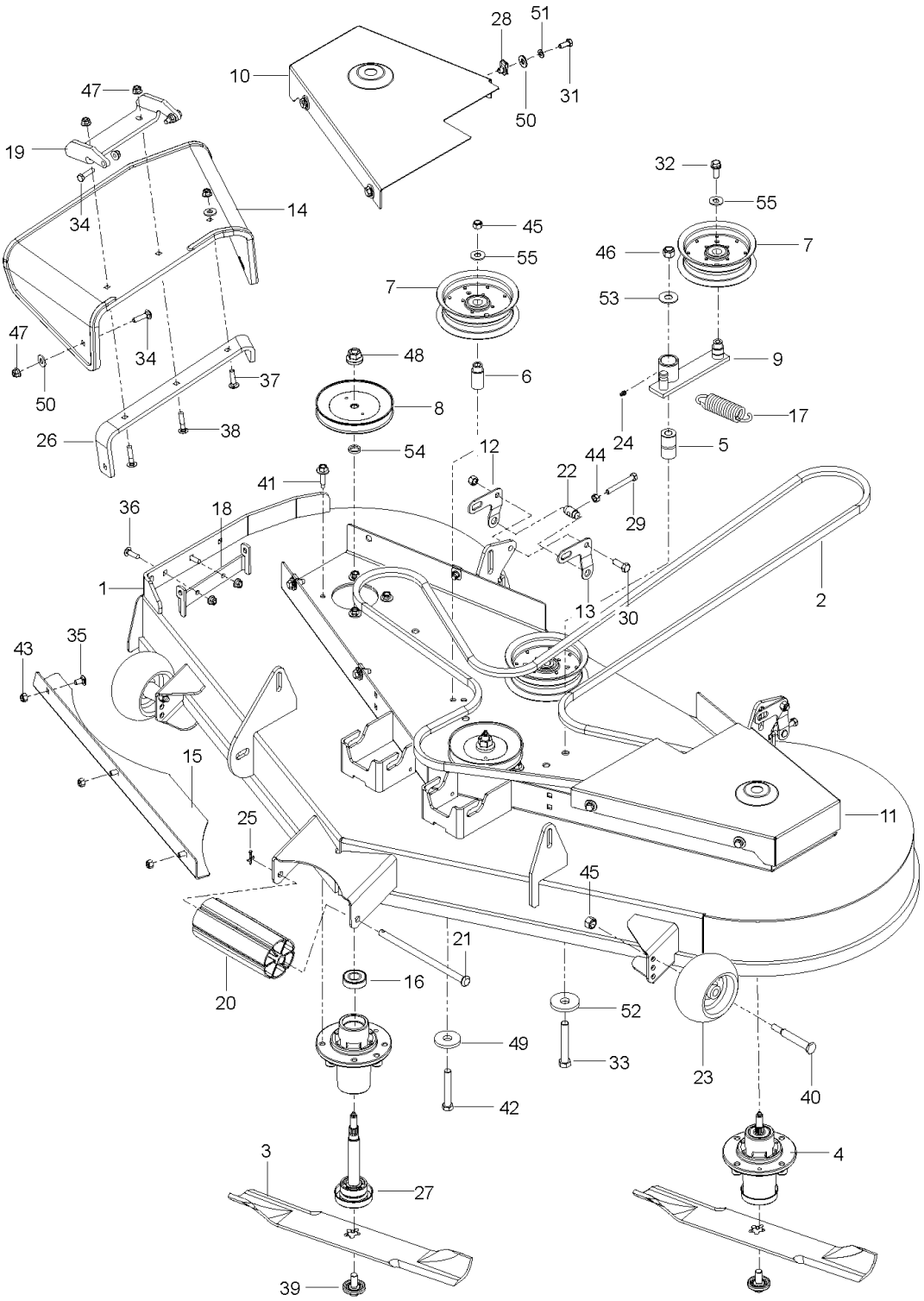

Ref.	Article N.	Description	Qty	Kit
1	586651402	PLATE -	1	-
2	574811001	PULLEY	1	-

Ref.	Article N.	Description	Qty	Kit
		-		
3	582042801	SOLENOID -	1	-
4	539101363	CLAMP -	1	-
5	584825501	HOSE ASSY -	1	-
6	575229902	BRACKET -	1	-
7	539102757	CABLE -	1	-
8	574607001	CLUTCH -	1	-
9	575017301	STOP -	1	-
10	539131604	MUFFLER ASSY -	1	-
11	583954501	TUBE -	1	-
12	583954801	TUBE -	1	-
13	586839701	GASKET -	2	-
14	532131563	COVER -	2	-
15	539102759	INSULATOR -	1	-
16	539912757	KEY -	1	-
17	539990071	BOLT -	1	-
18	817120616	SCREW -	4	-
19	539107271	SCREW -	2	-
20	874490512	BOLT -	8	-
21	581332802	BOLT -	1	-
22	539990302	HWST 1/4C X 3/8 -	1	-
23	539107475	BOLT -	2	-

Ref.	Article N.	Description	Qty	Kit
24	539108120	NUT -	4	-
25	539112899	NUT, 5/16-18, NYLOC -	10	-
26	539990053	WASHER -	1	-
27	539990247	WASHER -	1	-
1	586651402	PLATE	1	-
2	574846402	PLATE *For 967177008-01*	1	-
2	586670402	PLATE *For 967177007-01, 967045501-00*	1	-
3	574811001	PULLEY	1	-
4	539976688	PULLEY	1	-
5	532175820	PULLEY	1	-
6	574870901	DRIVE BELT	1	-
7	525435601	PIVOT	1	-
8	510206301	PIVOT	1	-
9	510041603	ARM	1	-
10	574607001	CLUTCH	1	-
11	575017302	STOP	1	-
12	539102757	CABLE *For 967177007-01, 967177008-01*	1	-
13	576701801	MUFFLER *For 967177007-01*	1	-
13	525750201	MUFFLER *For 967177008-01*	1	-
13	501451201	MUFFLER ASSY *For 967045501-00*	1	-
14	582042801	SOLENOID *For 967177007-01, 967177008-01*	1	-
15	510254401	SPRING	1	-
16	539114662	SHIELD, DUST	1	-
17	510254501	SHIELD	2	-
18	579150901	SHIELD *For 967177007-01, 967177008-01*	1	-
19	584825501	HOSE ASSY *For 967177008-01, 967045501-00*	1	-
20	522599001	ADAPTER *For 967177008-01*	1	-

Ref.	Article N.	Description	Qty	Kit
21	539101363	CLAMP *For 967177008-01, 967045501-00*	1	-
22	522837001	PLUG *For 967177008-01*	1	-
22	585807101	PLUG *For 967045501-00*	1	-
23	539912757	KEY	1	-
24	586839701	GASKET *For 967177007-01, 967177008-01*	2	-
25	532131563	COVER *For 967177007-01*	1	-
25	539102759	INSULATOR *For 967177008-01*	2	-
26	532131563	COVER *For 967177007-01*	2	-
27	539104763	CLIP	4	-
28	539100413	BOLT *For 967177007-01*	1	-
28	872140610	BOLT *For 967177008-01, 967045501-00*	1	-
29	872140622	BOLT *For 967045501-00*	1	-
29	539130235	RHSNB 3/8-16 X 2.75 GR5 ZD *For 967177007-01, 967177008-01*	1	-
30	872110508	BOLT *For 967177008-01*	2	-
31	581332802	BOLT	1	-
32	539103433	SCREW *For 967177007-01*	1	-
32	874780852	BOLT *For 967177008-01, 967045501-00*	1	-
33	525866201	BOLT *For 967177007-01*	1	-
33	874490632	SCREW *For 967177008-01, 967045501-00*	1	-
34	874490512	BOLT	11	-
35	874780408	BOLT *For 967045501-00*	1	-
35	539990071	BOLT *For 967177008-01*	1	-
36	817120616	SCREW *For 967177007-01, 967045501-00*	4	-

Ref.	Article N.	Description	Qty	Kit
36	539990563	SCREW *For 967177008-01*	4	-
37	592858702	BOLT	8	-
38	817490406	SCREW *For 967177008-01*	1	-
38	539990302	HWST 1/4C X 3/8 *For 967177007-01*	1	-
39	539990613	NUT *For 967177007-01*	1	-
40	539112899	NUT, 5/16-18, NYLOC	15	-
41	521991101	NUT	1	-
42	539200282	NUT	4	-
43	521996501	NUT *For 967177008-01, 967045501-00*	2	-
44	539108120	NUT *For 967177007-01, 967177008-01*	4	-
45	539990053	WASHER	1	-
46	539115528	1/2` CONTACT BELLSPR	1	-
47	539990247	WASHER	1	-
48	539109562	WASHER	1	-
50	539109554	WASHER *For 967177007-01*	2	-
50	819182212	WASHER *For 967177008-01, 967045501-00*	2	-
51	539111897	WASHER	1	-
52	819141614	WASHER	1	-
53	539990118	WASHER *For 967177008-01, 967045501-00*	4	-
54	539990613	NUT *For 967177007-01*	1	-
54	521996501	NUT *For 967177008-01, 967045501-00*	2	-
55	532183906	SCREW *For 967177007-01*	4	-
55	532192334	SCREW *For 967045501-00*	4	-
91	501279301	HARNESS *For 967045501-00*	1	-
92	586839901	GASKET *For 967045501-00, NOT SHOWN*	2	-
93	587450101	HARNESS *For 967045501-00*	1	-

Ref.	Article N.	Description	Qty	Kit
94	574825801	KIT *For 967045501-00, SPARK ARRESTOR*	1	-
1	501656001	FRAME -	1	-
2	586893002	GUARD -	1	-
3	586867702	SUPPORT -	1	-
4	586560101	BRACKET -	1	-
5	586560201	BRACKET -	1	-
6	539132744	PLATE -	1	-
7	539132380	PLATE -	1	-
8	594037402	BRACKET *For all EXCEPT 967844201-00, BLK*	1	-
8	587048702	BRACKET *For 967844201-00*	1	-
9	575245202	BRACKET -	2	-
10	575533602	MOUNT -	2	-
11	900000002	DUMMY PART *For all EXCEPT 967844201-00, 593 79 55-05 Guard, Skid Gray*	1	-
11	575230402	SHIELD *For 967844201-00*	1	-
12	539132859	HEAT SHIELD -	1	-
13	587990501	CAP -	2	-
14	593634302	STOP *For all EXCEPT 967844201-00*	2	-
14	505256401	STOP *For 967844201-00*	2	-
15	539102587	ABSORBER -	7	-
16	539105974	GROMMET -	1	-
17	522801401	BUMPER *For 967844201-00*	2	-
17	874490644	BOLT	2	-

Ref.	Article N.	Description	Qty	Kit
		For 967844201-00		
18	539104411	KNOB -	1	-
19	539200715	PIN *For 967844201-00*	2	-
19	874490512	BOLT *For 967844201-00*	1	-
20	539133006	BOLT *For 967844201-00*	2	-
20	574388001	PIN *For 967844201-00*	2	-
21	539104763	CLIP *For 967844201-00*	5	-
22	539133006	BOLT *For 967844201-00*	2	-
22	525544001	BOLT *For 967844201-00*	1	-
23	874490644	BOLT *For 967844201-00*	2	-
23	539102335	BOLT *For 967844201-00*	2	-
24	874490512	BOLT *For 967844201-00*	18	-
24	539109117	BOLT *For all EXCEPT 967844201-00*	2	-
25	872140508	BOLT *For all EXCEPT 967844201-00*	3	-
25	874490560	BOLT *For 967844201-00*	4	-
26	525544001	BOLT *For 967844201-00*	1	-
26	872110606	BOLT *For all EXCEPT 967844201-00*	6	-
27	539102335	BOLT *For 967844201-00*	2	-
27	539200282	NUT *For 967844201-00*	6	-
28	874490560	BOLT *For 967844201-00*	4	-
28	580754601	BOLT *For 967844201-00*	6	-
29	872140506	BOLT *For 967844201-00*	6	-

Ref.	Article N.	Description	Qty	Kit
29	521996501	NUT *For all EXCEPT 967844201-00*	2	-
30	539990208	SCREW *For 967844201-00*	3	-
30	539112899	NUT, 5/16-18, NYLOC *For all EXCEPT 967844201-00*	12	-
31	539990645	BOLT -	2	-
32	539990316	BOLT *For 967844201-00*	4	-
32	819111116	WASHER *For all EXCEPT 967844201-00*	2	-
33	539200282	NUT *For 967844201-00*	6	-
33	539990250	WASHER *For all EXCEPT 967844201-00*	1	-
34	521996501	NUT *For all EXCEPT 967844201-00*	2	-
35	539112899	NUT, 5/16-18, NYLOC *For all EXCEPT 967844201-00*	13	-
36	525829101	NUT -	6	-
37	539976978	NUT *For 967844201-00*	2	-
37	873800400	NUT *For all EXCEPT 967844201-00*	4	-
38	819111116	WASHER *For all EXCEPT 967844201-00*	2	-
39	539990250	WASHER *For all EXCEPT 967844201-00*	1	-
40	819132416	WASHER -	2	-
41	539102653	WASHER *For 967844201-00*	4	-
42	539104763	CLIP *For 967844201-00*	8	-
43	539102653	WASHER *For 967844201-00*	4	-
62	575274801	KIT *For 967844201-00, NOT SHOWN PROTECTION FRAME*	1	-
1	586670402	PLATE	1	-
2	539976688	PULLEY	1	-
3	532175820	PULLEY	1	-

Ref.	Article N.	Description	Qty	Kit
4	510041603	ARM	1	-
5	574870901	DRIVE BELT	1	-
6	584994202	SHIELD	2	-
7	539102587	ABSORBER	2	-
8	510206301	PIVOT	1	-
9	525435601	PIVOT	1	-
10	539104763	CLIP	4	-
11	510254501	SHIELD	2	-
12	539114662	SHIELD, DUST	1	-
13	510254401	SPRING	1	-
14	872140610	BOLT	1	-
15	539130235	RHSNB 3/8-16 X 2.75 GR5 ZD	1	-
16	874490632	SCREW	1	-
17	874490512	BOLT	3	-
18	592858702	BOLT	9	-
19	874780852	BOLT	1	-
20	521991101	NUT	1	-
21	521996501	NUT	2	-
22	539112899	NUT, 5/16-18, NYLOC	5	-
23	539200282	NUT	4	-
24	539990613	NUT	1	-
25	539115528	1/2` CONTACT BELLSPR	1	-
26	819182212	WASHER	2	-
27	819141614	WASHER	1	-
28	539109562	WASHER	1	-
31	539111897	WASHER	1	-
1	574569101	TRANSMISSION *LEFT*	1	-
2	574569102	TRANSMISSION *RIGHT*	1	-
3	593278902	BRACKET *For 967177008-01, 967045501-00, 967844201-00*	1	-
3	575017102	BRACKET *For 967177007-01*	1	-
4	593279002	BRACKET *For 967177008-01, 967045501-00, 967844201-00*	1	-
4	575017002	BRACKET *For 967177007-01*	1	-
5	539131616	LINKAGE. LEFT BYPASS	1	-
6	539131618	LINKAGE	1	-

Ref.	Article N.	Description	Qty	Kit
7	574892101	HOSE ASSY	2	-
8	586067501	HOSE	1	-
9	585318201	TANK	1	-
10	584994202	SHIELD	2	-
11	539113466	OIL FILTER	2	-
12	530095646	FUEL FILTER	1	-
13	586072701	CAP	1	-
14	539976988	PIN	2	-
15	539102587	ABSORBER	2	-
16	539976988	PIN	2	-
17	539990643	BOLT	1	-
18	592858702	BOLT	9	-
19	539101721	SCREW *For 967177007-01*	4	-
19	539976978	NUT *For 967177008-01, 967045501-00, 967844201-00*	4	-
20	539112899	NUT, 5/16-18, NYLOC	2	-
21	574233801	SCREW	4	-
22	539990118	WASHER	4	-
23	539112899	NUT, 5/16-18, NYLOC	8	-
24	596204101	WASHER	2	-
25	539990118	WASHER	2	-
26	539990187	WASHER	4	-
27	539990055	WASHER	4	-
28	539990122	WASHER	2	-
1	585722303	FUEL TANK ASSY	1	-
2	539107593	CONSOLE	1	-
3	539102436	BATTERY	1	-
4	588107201	BRACKET *For 967045501-00, 967844201-00*	1	-
4	593634404	BRACKET *For 967177008-01*	1	-
4	510030001	BRACKET *For 967177007-01*	1	-
5	588030801	CABLE	1	-
6	588030701	CABLE	1	-
7	574841204	PLATE *For 967177007-01, 967045501-00, 967844201-00*	1	-
7	592877402	PLATE *For 967177008-01*	1	-

Ref.	Article N.	Description	Qty	Kit
8	582107602	SWITCH *For 967177007-01, 967177008-01, 967844201-00*	1	-
8	539131627	SWITCH *For 967045501-00*	1	-
9	574455401	SWITCH	1	-
10	581878301	LIGHT *For 967045501-00*	1	-
10	584971801	CHOKE *For 967844201-00*	1	-
10	574206903	CABLE *For 967177007-01, 967177008-01*	1	-
11	539102732	THROTTLE *For 967045501-00, 967844201-00*	1	-
11	539112438	THROTTLE CABLE *For 967177007-01, 967177008-01*	1	-
12	539133049	KNOB	1	-
13	586123901	FUEL HOSE *For 967177007-01, 967045501-00*	1	-
13	586123903	FUEL HOSE *For 967177008-01, 967844201-00*	1	-
14	576469201	FITTING	1	-
15	575018101	CAP	1	-
16	576618101	TANK VENT	1	-
17	539916325	VALVE *For 967844201-00*	1	-
18	576618201	GROMMET	1	-
19	539105245	GROMMET	1	-
20	539103178	NUT CAP	1	-
21	575436501	CLAMP	2	-
22	532123487	HOSE CLAMP *For 967844201-00*	4	-
23	587044810	HOSE *For 967844201-00*	2	-
24	587044539	HOSE *For 967045501-00*	1	-
24	587044536	HOSE *For 967177008-01, CUT TO LENGTH*	1	-
24	587044555	HOSE *For 967844201-00*	1	-
24	587044564	HOSE *For 967177007-01, CUT TO FIT*	1	-
25	574455501	KEY	1	-

Ref.	Article N.	Description	Qty	Kit
26	586161801	HOUR METER	1	-
28	582484201	SCREW	6	-
29	588843202	SUPPORT *For 967177008-01, 967844201-00*	2	-
29	539131671	SUPPORT *For 967177007-01, 967045501-00*	2	-
30	510064001	HOOK	2	-
31	532435395	TERMINAL COVER	1	-
32	539976934	SCREW *For 967177008-01, 967844201-00*	2	-
32	874780512	SCREW *For 967177007-01, 967045501-00*	2	-
33	872140506	BOLT *For 967177007-01, 967045501-00*	2	-
33	539990316	BOLT *For 967177008-01, 967844201-00*	2	-
34	539990411	SCREW *For 967045501-00, 967844201-00*	6	-
34	817490516	SCREW *For 967045501-00, 967844201-00*	3	-
35	539990411	SCREW *For 967045501-00, 967844201-00*	6	-
35	817490516	SCREW *For 967045501-00, 967844201-00*	3	-
36	539976977	NUT	2	-
37	539990997	NUT	2	-
38	539112899	NUT, 5/16-18, NYLOC	13	-
39	819070818	WASHER	4	-
40	819111116	WASHER	2	-
41	539990187	WASHER	2	-
42	532197802	SWITCH *For 967177008-01, 967177007-01*	1	-
42	539113792	SWITCH *For 967045501-00*	1	-
43	532109553	SWITCH *For 967177007-01, 967177008-01, 967045501-00*	2	-
44	581223001	PLATE *For 967177007-01, 967177008-01, 967045501-00*	2	-
45	574822701	SCREW *For 967177007-01, 967177008-01, 967045501-00*	4	-
63	589669901	HARNESS *For 967177007-01, 967844201-00*	1	-

Ref.	Article N.	Description	Qty	Kit
64	532409615	HARNESS *For 967177007-01, 967844201-00*	1	-
65	501279301	HARNESS *For 967045501-00*	1	-
66	900000002	DUMMY PART *For 967177008-01, 589 66 99-02 Harness w/Brake Switch*	1	-
1	581505401	DECK -	1	-
2	539104335	DRIVE BELT -	1	-
3	539113312	BLADE -	3	-
4	539131898	SPINDLE -	3	-
5	539103427	BUSHING -	1	-
6	539112169	BLADE BUSHING -	2	-
7	589766101	PULLEY -	3	-
8	539113300	PULLEY -	3	-
9	539112198	ARM -	1	-
10	539113319	SHIELD -	1	-
11	539113322	SHIELD -	1	-
12	584859402	BRACKET -	2	-
13	584859404	BRACKET -	2	-
14	539130901	CHUTE -	1	-
15	539113317	PLATE -	1	-
16	585323901	BEARING *For 967177008-01, 967045501-00*	3	-
16	532110485	BEARING *For 967177007-01, 967844201-00*	3	-
17	539103256	SPRING -	1	-
18	581606106	BRACKET	1	-

Ref.	Article N.	Description	Qty	Kit
		For 967844201-00		
18	581606102	BRACKET *For 967177007-01, 967177008-01, 967045501-00, ORG*	1	-
19	539130917	BRACKET -	1	-
20	532176066	ROLLER -	1	-
21	532179127	PIN -	1	-
22	539131859	PIN -	2	-
23	532133957	WHEEL -	2	-
24	539976998	NIPPLE -	1	-
25	876020412	SPLIT PIN -	2	-
26	581606102	BRACKET *For 967177007-01, 967177008-01, 967045501-00, ORG*	1	-
26	592964402	BRACKET *For 967177007-01, 967177008-01, 967045501-00*	1	-
27	532187291	SHAFT -	3	-
28	539104763	CLIP *For 967844201-00*	8	-
28	874780648	BOLT *For 967177007-01, 967177008-01, 967045501-00*	2	-
29	539108396	BOLT -	2	-
30	539990563	SCREW -	2	-
31	539976934	SCREW -	8	-
32	539990582	SCREW -	1	-
33	539103433	SCREW *For 967177007-01, 967844201-00*	1	-
33	589343201	MANDREL *For 967177008-01, 967045501-00*	1	-
34	874780520	BOLT -	2	-
35	539990799	BOLT -	3	-

Ref.	Article N.	Description	Qty	Kit
36	872110508	BOLT *For 967177007-01*	2	-
36	539107271	SCREW *For 967177008-01, 967045501-00, 967844201-00*	2	-
37	539100472	SCREW -	2	-
38	539102933	SCREW -	2	-
39	532193003	SCREW -	3	-
40	532137644	SCREW -	2	-
41	584953901	BOLT -	12	-
42	874780648	BOLT *For 967177007-01, 967177008-01, 967045501-00*	2	-
42	532400234	NUT *For 967177007-01, 967177008-01, 967045501-00*	3	-
43	539990717	NUT -	3	-
44	539990196	NUT -	2	-
45	539976979	NUT -	6	-
46	539101331	NUT *For 967177007-01*	1	-
46	873800800	NUT *For 967177008-01, 967045501-00, 967844201-00*	1	-
47	539112899	NUT, 5/16-18, NYLOC -	8	-
48	596134801	HEXAGON NUT -	3	-
49	539106504	WASHER -	2	-
50	819121414	WASHER *For 967844201-00*	10	-
50	539990692	WASHER *For 967177007-01, 967177008-01, 967045501-00*	11	-
51	539109600	WASHER -	8	-
52	539102243	WASHER -	1	-
53	539990550	WASHER	1	-

Ref.	Article N.	Description	Qty	Kit
		For 967177007-01		
53	819182212	WASHER *For 967177008-01, 967045501-00, 967844201-00*	1	-
54	532187690	WASHER -	3	-
55	819141614	WASHER -	3	-
1	510408301	PEDAL -	1	-
2	539110808	CROSS LINK -	2	-
3	586701701	SPACER -	2	-
4	539131861	SPACER. .3 -	1	-
5	586928702	LIFT -	1	-
6	584392702	PLATE -	2	-
7	539131897	BELLCRANK -	1	-
8	539131853	BELLCRANK -	1	-
9	588812102	BRACKET -	1	-
10	588812002	BRACKET -	1	-
11	539131566	LATCH -	1	-
12	539105059	ROPE -	1	-
13	539131791	MOUNT -	1	-
14	532195161	STUD -	4	-
15	539131792	SPRING -	1	-
16	539112896	BOLT -	1	-
17	539102642	SPRING -	1	-
18	539132734	SPRING. TORSION -	1	-

Ref.	Article N.	Description	Qty	Kit
19	539131850	HEIGHT. ADJUST. DECK -	1	-
20	539131860	PIVOT. LATCH. TRANSPORT -	1	-
21	539104808	SUPPORT -	4	-
22	539132182	PIN -	1	-
23	539132851	GRIP -	1	-
24	539115501	COTTER -	4	-
25	532194209	SPRING -	2	-
26	874780648	BOLT -	1	-
27	539990646	BOLT -	1	-
28	874780544	BOLT -	4	-
29	539108181	HCS 1/2-13 X 1-3/4 GR 8 ZD -	2	-
30	539990563	SCREW -	4	-
31	539112899	NUT, 5/16-18, NYLOC -	5	-
32	539976979	NUT -	4	-
33	873800800	NUT -	2	-
34	873900500	NUT -	2	-
35	539200282	NUT -	2	-
36	873900600	NUT -	4	-
37	819141614	WASHER -	1	-
38	539115528	1/2` CONTACT BELLSPR -	1	-
39	539109554	WASHER -	2	-
40	819191912	WASHER	2	-

Ref.	Article N.	Description	Qty	Kit
		-		
41	539991043	BUSHING -	10	-
1	510408301	PEDAL -	1	-
2	539110808	CROSS LINK -	2	-
3	586701701	SPACER -	2	-
4	539131861	SPACER. .3 -	1	-
5	586928702	LIFT -	1	-
6	584392702	PLATE -	2	-
7	539131897	BELLCRANK -	1	-
8	539131853	BELLCRANK -	1	-
9	539112223	STRUT -	2	-
10	539109693	LIFT CHAIN - 3 LINK -	4	-
11	539131566	LATCH -	1	-
12	539105059	ROPE -	1	-
13	539991043	BUSHING *For 967177007-01*	10	-
13	819211616	WASHER *For 967177008-01, 967045501-00*	1	-
14	539132017	MOUNT -	2	-
15	532194209	SPRING *For 967177008-01, 967045501-00*	1	-
16	539112896	BOLT -	1	-
17	539102642	SPRING *For 967177007-01*	1	-
17	539131790	SPRING *For 967177008-01, 967045501-00*	1	-
18	539132734	SPRING. TORSION -	1	-

Ref.	Article N.	Description	Qty	Kit
19	539131850	HEIGHT. ADJUST. DECK -	1	-
20	539131860	PIVOT. LATCH. TRANSPORT -	1	-
21	539104808	SUPPORT -	4	-
22	539132182	PIN -	1	-
24	539132851	GRIP -	1	-
25	539115501	COTTER -	6	-
26	874780544	BOLT *For 967177008-01, 967045501-00*	4	-
26	539101721	SCREW *For 967177007-01*	4	-
27	539108181	HCS 1/2-13 X 1-3/4 GR 8 ZD -	2	-
28	539976941	SCREW -	4	-
29	539101175	SCREW -	4	-
30	874780648	BOLT -	1	-
31	539990646	BOLT -	1	-
32	539108073	BOLT -	4	-
33	539200282	NUT -	2	-
34	539132019	NUT -	8	-
35	539102582	NUT -	8	-
36	539112899	NUT, 5/16-18, NYLOC *For 967177007-01*	5	-
37	539976979	NUT -	4	-
38	539101331	NUT *For 967177007-01*	1	-
38	873800800	NUT *For 967177008-01, 967045501-00*	1	-
39	819141614	WASHER	1	-

Ref.	Article N.	Description	Qty	Kit
		-		
40	539115528	1/2` CONTACT BELLSPR -	2	-
41	539109554	WASHER *For 967177007-01*	2	-
41	819182212	WASHER *For 967177008-01, 967045501-00*	2	-
42	539112899	NUT, 5/16-18, NYLOC *For 967177007-01*	5	-
43	539131791	MOUNT *For 967177007-01*	1	-
44	539131792	SPRING *For 967177007-01*	1	-
1	539132151	ARM -	1	-
2	539105036	GRIP -	1	-
3	575229602	BRACKET -	1	-
4	575229702	BRACKET -	1	-
5	586738802	LEVER -	1	-
6	575230201	SPRING -	2	-
7	575230301	SPRING -	2	-
8	586830002	MOUNT -	1	-
9	539132154	ACTUATOR -	1	-
10	539132153	BELLCRANK -	2	-
11	539132424	LINKAGE. BRAKE -	1	-
12	575229802	BRACKET -	2	-
13	539132161	BLADE BUSHING -	4	-
14	539104763	CLIP -	3	-
15	582121801	CABLE ASSY -	1	-

Ref.	Article N.	Description	Qty	Kit
16	582122001	CABLE ASSY -	2	-
17	505280001	TIE WRAP -	2	-
18	539990643	BOLT -	4	-
19	539108396	BOLT -	1	-
20	539990563	SCREW -	2	-
21	539990209	SCREW -	1	-
22	539110303	BOLT -	2	-
23	539990645	BOLT -	2	-
24	539990316	BOLT -	1	-
25	539131780	BOLT -	1	-
26	874490512	BOLT -	1	-
27	539112899	NUT, 5/16-18, NYLOC -	2	-
28	539990585	NUT -	5	-
29	539990717	NUT -	1	-
30	521996501	NUT -	2	-
31	539115617	NUT -	2	-
32	539200282	NUT -	2	-
33	539976978	NUT -	4	-
34	539107897	NUT -	2	-
35	539990055	WASHER -	8	-
36	539133007	WASHER -	1	-
37	539990122	WASHER	2	-

Ref.	Article N.	Description	Qty	Kit
		-		
38	819182212	WASHER -	1	-
39	532197802	SWITCH -	1	-
1	593564002	ARM -	1	-
2	539105036	GRIP -	1	-
3	593279202	BRACKET -	1	-
4	593279902	BRACKET -	1	-
5	590337701	GEAR -	1	-
6	575230201	SPRING -	2	-
7	575230301	SPRING -	2	-
8	590631502	MOUNT -	1	-
9	590204501	GEAR -	1	-
10	539990196	NUT -	2	-
11	596018303	BRACKET -	6	-
12	539104763	CLIP -	3	-
13	582121801	CABLE ASSY -	1	-
14	582122001	CABLE ASSY -	1	-
15	582121801	CABLE ASSY -	2	-
16	582122001	CABLE ASSY -	1	-
17	596018303	BRACKET -	1	-
18	593239802	ACTUATOR -	1	-
19	539990643	BOLT -	4	-

Ref.	Article N.	Description	Qty	Kit
20	539108396	BOLT -	1	-
21	525544001	BOLT -	3	-
22	539110303	BOLT -	2	-
23	539990645	BOLT -	2	-
24	539990316	BOLT -	1	-
25	539131780	BOLT -	1	-
26	874490512	BOLT -	1	-
27	525544001	BOLT -	1	-
28	539112899	NUT, 5/16-18, NYLOC -	1	-
29	539990585	NUT -	2	-
30	539990717	NUT -	1	-
31	521996501	NUT -	2	-
32	539115617	NUT -	2	-
33	539200282	NUT -	3	-
34	539976978	NUT -	4	-
35	539107897	NUT -	2	-
36	539990196	NUT -	2	-
37	539990055	WASHER -	8	-
38	819182212	WASHER -	1	-
39	539990122	WASHER -	2	-
40	819182212	WASHER -	1	-
41	595846701	BRAKE ASSY	1	-

Ref.	Article N.	Description	Qty	Kit
		NOT SHOWN		
1	501580402	SEAT -	1	-
2	539130359	BELT -	1	-
3	539103247	WIRE -	1	-
4	501762102	SUPPORT -	1	-
5	584916802	MOUNT -	2	-
6	587613301	SPRING -	2	-
7	539104763	CLIP -	8	-
8	539130793	STOP -	1	-
9	539119741	SWITCH -	1	-
10	584809102	SUPPORT -	1	-
11	584990102	SUPPORT -	1	-
12	584990202	SUPPORT -	1	-
13	539105974	GROMMET -	1	-
14	874490512	BOLT -	2	-
15	525544001	BOLT -	4	-
16	874490560	BOLT -	2	-
17	539990645	BOLT -	3	-
18	539115620	1/4-20X3/4 CARR BLT -	1	-
19	539130896	BOLT -	2	-
20	539112034	BOLT *For 967844201-00*	2	-
20	539124775	SCREW *For 967177007-01, 967177008-01, 967045501-00*	2	-

Ref.	Article N.	Description	Qty	Kit
21	872050506	BOLT *For 967844201-00*	2	-
22	539112899	NUT, 5/16-18, NYLOC -	9	-
23	539976979	NUT -	2	-
24	539990394	NUT -	2	-
25	539976978	NUT -	1	-
26	819141614	WASHER *For 967177007-01, 967177008-01, 967045501-00*	4	-
26	819091216	WASHER *For 967177007-01, 967177008-01, 967045501-00*	1	-
27	819141614	WASHER *For 967177007-01, 967177008-01, 967045501-00*	4	-
27	819091216	WASHER *For 967177007-01, 967177008-01, 967045501-00*	1	-
28	521996501	NUT *For 967177007-01, 967177008-01, 967045501-00*	1	-
29	873800500	LOCK NUT *For 967177007-01, 967177008-01, 967045501-00*	1	-
1	590090803	TUBE	1	-
2	590090804	TUBE	1	-
3	532109553	SWITCH	2	-
4	585124705	BRACKET	2	-
5	539438282	BEARING *For 967177007-01, 967177008-01, 967045501-00*	4	-
5	532438282	BEARING UNIT *For 967844201-00*	4	-
6	587187701	CONTROL	2	-
7	577420001	LEVER	2	-
8	584927201	SPACER	2	-
9	539102720	GAS SPRING	2	-
10	581437501	BLOCK	2	-
11	539102845	SPRING	2	-
12	576850301	SPRING	1	-
13	539131799	KNOB	1	-
14	574811401	ROD	2	-
15	539116689	ROD END COUPLER	2	-
16	588692502	ROD	2	-

Ref.	Article N.	Description	Qty	Kit
17	579764601	JOINT	2	-
18	581223001	PLATE *For 967844201-00*	2	-
19	576850402	SCREW *For 967177007-01, 967177008-01, 967045501-00*	2	-
19	539990585	NUT *For 967177007-01, 967177008-01, 967045501-00*	4	-
20	574822701	SCREW *For 967844201-00*	4	-
21	874780844	BOLT *For 967177007-01, 967177008-01, 967045501-00*	2	-
21	596580801	BOLT *NOTE: If you order 596580801 you will need to also order key 30 532423063 in the same quantity.*	1	-
22	874780844	BOLT *For 967177007-01, 967177008-01, 967045501-00*	2	-
22	539976935	SCREW *For 967177007-01, 967177008-01, 967045501-00*	4	-
23	539976935	SCREW *For 967177007-01, 967177008-01, 967045501-00*	4	-
23	525544001	BOLT *For 967177007-01, 967177008-01, 967045501-00*	4	-
24	525544001	BOLT *For 967177007-01, 967177008-01, 967045501-00*	4	-
24	874490512	BOLT *For 967177007-01, 967177008-01, 967045501-00*	8	-
25	576850402	SCREW *For 967177007-01, 967177008-01, 967045501-00*	2	-
25	874490512	BOLT *For 967177007-01, 967177008-01, 967045501-00*	8	-
26	539991073	NUT	2	-
27	539990585	NUT *For 967177007-01, 967177008-01, 967045501-00*	4	-
28	539990717	NUT *For 967177007-01, 967177008-01, 967045501-00*	6	-
28	539108010	NUT *For 967177007-01, 967177008-01, 967045501-00*	2	-
29	539990717	NUT *For 967177007-01, 967177008-01, 967045501-00*	4	-
29	539112899	NUT, 5/16-18, NYLOC *For 967177007-01, 967177008-01, 967045501-00*	10	-
30	819111116	WASHER *For 967177007-01, 967177008-01, 967045501-00*	12	-

Ref.	Article N.	Description	Qty	Kit
30	532423063	WASHER *NOTE: If you order 532423063 you will need to also order key 30 596580801 in the same quantity.*	1	-
31	539990223	NUT	4	-
32	819111116	WASHER *For 967177007-01, 967177008-01, 967045501-00*	14	-
33	539130894	GRIP *For 967177007-01, 967177008-01, 967045501-00*	2	-
34	874780520	BOLT *For 967177007-01, 967177008-01, 967045501-00*	5	-
35	539108010	NUT *For 967177007-01, 967177008-01, 967045501-00*	2	-
36	595305701	SCREW	2	-
1	586955401	WHEEL ASSY -	2	-
2	581199501	WHEEL ASSY -	2	-
3	582746401	TIRE -	2	-
3	539102543	BEARING -	4	-
4	539102535	CAP -	2	-
5	586921902	FORK -	2	-
6	539102851	SEALING -	2	-
7	575334901	SPACER -	2	-
8	539101474	NIPPLE -	2	-
9	539102889	SPLIT PIN -	2	-
10	539105517	BOLT -	2	-
11	539102852	NUT -	2	-
12	521991101	NUT -	2	-
13	587653902	NUT -	8	-
14	819182212	WASHER -	2	-

MOWER LIFT \/ DECK LIFT

For 967844201-00

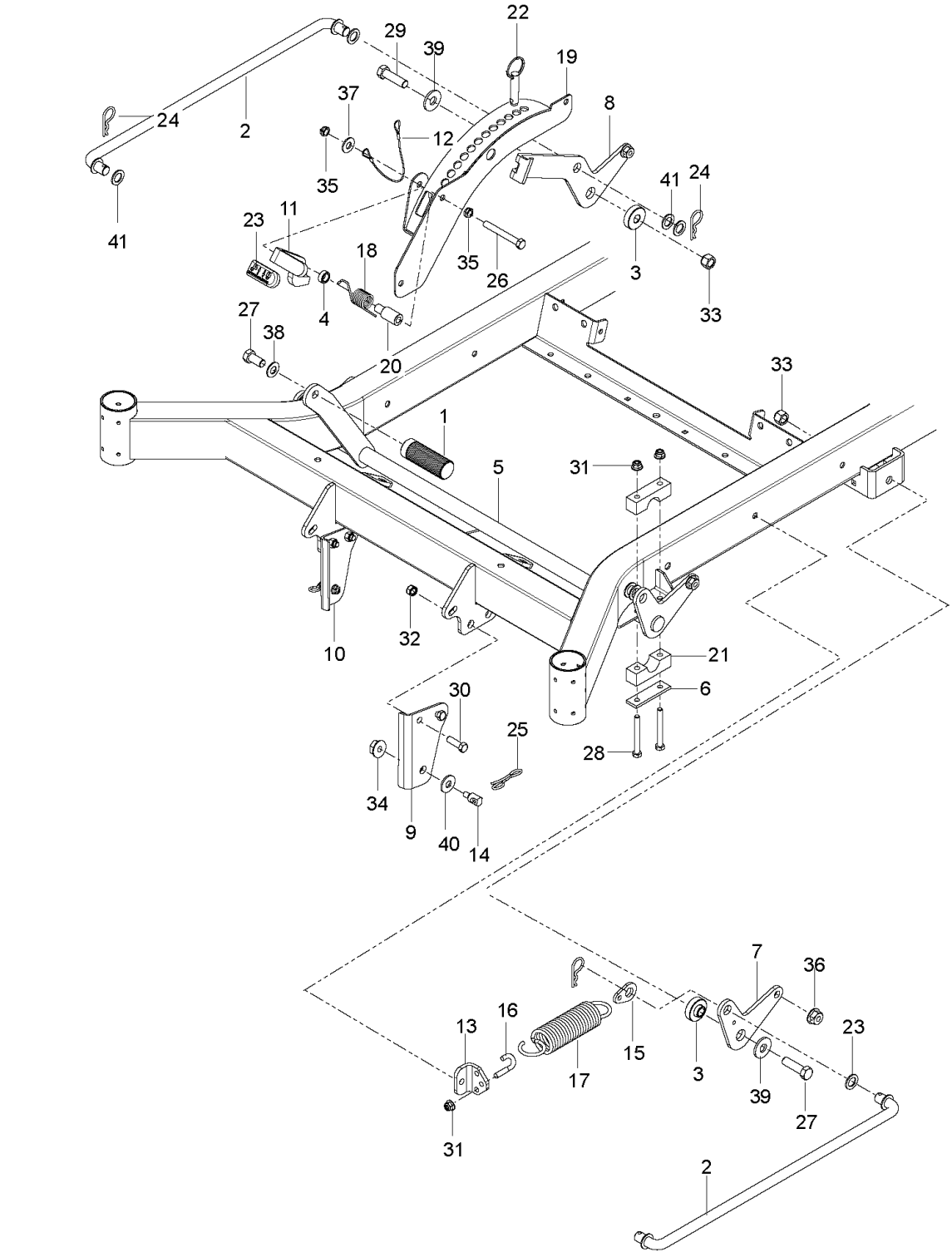

Ref.	Article N.	Description	Qty	Kit
1	586651402	PLATE -	1	-
2	574811001	PULLEY	1	-

Ref.	Article N.	Description	Qty	Kit
		-		
3	582042801	SOLENOID -	1	-
4	539101363	CLAMP -	1	-
5	584825501	HOSE ASSY -	1	-
6	575229902	BRACKET -	1	-
7	539102757	CABLE -	1	-
8	574607001	CLUTCH -	1	-
9	575017301	STOP -	1	-
10	539131604	MUFFLER ASSY -	1	-
11	583954501	TUBE -	1	-
12	583954801	TUBE -	1	-
13	586839701	GASKET -	2	-
14	532131563	COVER -	2	-
15	539102759	INSULATOR -	1	-
16	539912757	KEY -	1	-
17	539990071	BOLT -	1	-
18	817120616	SCREW -	4	-
19	539107271	SCREW -	2	-
20	874490512	BOLT -	8	-
21	581332802	BOLT -	1	-
22	539990302	HWST 1/4C X 3/8 -	1	-
23	539107475	BOLT -	2	-

Ref.	Article N.	Description	Qty	Kit
24	539108120	NUT -	4	-
25	539112899	NUT, 5/16-18, NYLOC -	10	-
26	539990053	WASHER -	1	-
27	539990247	WASHER -	1	-
1	586651402	PLATE	1	-
2	574846402	PLATE *For 967177008-01*	1	-
2	586670402	PLATE *For 967177007-01, 967045501-00*	1	-
3	574811001	PULLEY	1	-
4	539976688	PULLEY	1	-
5	532175820	PULLEY	1	-
6	574870901	DRIVE BELT	1	-
7	525435601	PIVOT	1	-
8	510206301	PIVOT	1	-
9	510041603	ARM	1	-
10	574607001	CLUTCH	1	-
11	575017302	STOP	1	-
12	539102757	CABLE *For 967177007-01, 967177008-01*	1	-
13	576701801	MUFFLER *For 967177007-01*	1	-
13	525750201	MUFFLER *For 967177008-01*	1	-
13	501451201	MUFFLER ASSY *For 967045501-00*	1	-
14	582042801	SOLENOID *For 967177007-01, 967177008-01*	1	-
15	510254401	SPRING	1	-
16	539114662	SHIELD, DUST	1	-
17	510254501	SHIELD	2	-
18	579150901	SHIELD *For 967177007-01, 967177008-01*	1	-
19	584825501	HOSE ASSY *For 967177008-01, 967045501-00*	1	-
20	522599001	ADAPTER *For 967177008-01*	1	-

Ref.	Article N.	Description	Qty	Kit
21	539101363	CLAMP *For 967177008-01, 967045501-00*	1	-
22	522837001	PLUG *For 967177008-01*	1	-
22	585807101	PLUG *For 967045501-00*	1	-
23	539912757	KEY	1	-
24	586839701	GASKET *For 967177007-01, 967177008-01*	2	-
25	532131563	COVER *For 967177007-01*	1	-
25	539102759	INSULATOR *For 967177008-01*	2	-
26	532131563	COVER *For 967177007-01*	2	-
27	539104763	CLIP	4	-
28	539100413	BOLT *For 967177007-01*	1	-
28	872140610	BOLT *For 967177008-01, 967045501-00*	1	-
29	872140622	BOLT *For 967045501-00*	1	-
29	539130235	RHSNB 3/8-16 X 2.75 GR5 ZD *For 967177007-01, 967177008-01*	1	-
30	872110508	BOLT *For 967177008-01*	2	-
31	581332802	BOLT	1	-
32	539103433	SCREW *For 967177007-01*	1	-
32	874780852	BOLT *For 967177008-01, 967045501-00*	1	-
33	525866201	BOLT *For 967177007-01*	1	-
33	874490632	SCREW *For 967177008-01, 967045501-00*	1	-
34	874490512	BOLT	11	-
35	874780408	BOLT *For 967045501-00*	1	-
35	539990071	BOLT *For 967177008-01*	1	-
36	817120616	SCREW *For 967177007-01, 967045501-00*	4	-

Ref.	Article N.	Description	Qty	Kit
36	539990563	SCREW *For 967177008-01*	4	-
37	592858702	BOLT	8	-
38	817490406	SCREW *For 967177008-01*	1	-
38	539990302	HWST 1/4C X 3/8 *For 967177007-01*	1	-
39	539990613	NUT *For 967177007-01*	1	-
40	539112899	NUT, 5/16-18, NYLOC	15	-
41	521991101	NUT	1	-
42	539200282	NUT	4	-
43	521996501	NUT *For 967177008-01, 967045501-00*	2	-
44	539108120	NUT *For 967177007-01, 967177008-01*	4	-
45	539990053	WASHER	1	-
46	539115528	1/2` CONTACT BELLSPR	1	-
47	539990247	WASHER	1	-
48	539109562	WASHER	1	-
50	539109554	WASHER *For 967177007-01*	2	-
50	819182212	WASHER *For 967177008-01, 967045501-00*	2	-
51	539111897	WASHER	1	-
52	819141614	WASHER	1	-
53	539990118	WASHER *For 967177008-01, 967045501-00*	4	-
54	539990613	NUT *For 967177007-01*	1	-
54	521996501	NUT *For 967177008-01, 967045501-00*	2	-
55	532183906	SCREW *For 967177007-01*	4	-
55	532192334	SCREW *For 967045501-00*	4	-
91	501279301	HARNESS *For 967045501-00*	1	-
92	586839901	GASKET *For 967045501-00, NOT SHOWN*	2	-
93	587450101	HARNESS *For 967045501-00*	1	-

Ref.	Article N.	Description	Qty	Kit
94	574825801	KIT *For 967045501-00, SPARK ARRESTOR*	1	-
1	501656001	FRAME -	1	-
2	586893002	GUARD -	1	-
3	586867702	SUPPORT -	1	-
4	586560101	BRACKET -	1	-
5	586560201	BRACKET -	1	-
6	539132744	PLATE -	1	-
7	539132380	PLATE -	1	-
8	594037402	BRACKET *For all EXCEPT 967844201-00, BLK*	1	-
8	587048702	BRACKET *For 967844201-00*	1	-
9	575245202	BRACKET -	2	-
10	575533602	MOUNT -	2	-
11	900000002	DUMMY PART *For all EXCEPT 967844201-00, 593 79 55-05 Guard, Skid Gray*	1	-
11	575230402	SHIELD *For 967844201-00*	1	-
12	539132859	HEAT SHIELD -	1	-
13	587990501	CAP -	2	-
14	593634302	STOP *For all EXCEPT 967844201-00*	2	-
14	505256401	STOP *For 967844201-00*	2	-
15	539102587	ABSORBER -	7	-
16	539105974	GROMMET -	1	-
17	522801401	BUMPER *For 967844201-00*	2	-
17	874490644	BOLT	2	-

Ref.	Article N.	Description	Qty	Kit
		For 967844201-00		
18	539104411	KNOB -	1	-
19	539200715	PIN *For 967844201-00*	2	-
19	874490512	BOLT *For 967844201-00*	1	-
20	539133006	BOLT *For 967844201-00*	2	-
20	574388001	PIN *For 967844201-00*	2	-
21	539104763	CLIP *For 967844201-00*	5	-
22	539133006	BOLT *For 967844201-00*	2	-
22	525544001	BOLT *For 967844201-00*	1	-
23	874490644	BOLT *For 967844201-00*	2	-
23	539102335	BOLT *For 967844201-00*	2	-
24	874490512	BOLT *For 967844201-00*	18	-
24	539109117	BOLT *For all EXCEPT 967844201-00*	2	-
25	872140508	BOLT *For all EXCEPT 967844201-00*	3	-
25	874490560	BOLT *For 967844201-00*	4	-
26	525544001	BOLT *For 967844201-00*	1	-
26	872110606	BOLT *For all EXCEPT 967844201-00*	6	-
27	539102335	BOLT *For 967844201-00*	2	-
27	539200282	NUT *For 967844201-00*	6	-
28	874490560	BOLT *For 967844201-00*	4	-
28	580754601	BOLT *For 967844201-00*	6	-
29	872140506	BOLT *For 967844201-00*	6	-

Ref.	Article N.	Description	Qty	Kit
29	521996501	NUT *For all EXCEPT 967844201-00*	2	-
30	539990208	SCREW *For 967844201-00*	3	-
30	539112899	NUT, 5/16-18, NYLOC *For all EXCEPT 967844201-00*	12	-
31	539990645	BOLT -	2	-
32	539990316	BOLT *For 967844201-00*	4	-
32	819111116	WASHER *For all EXCEPT 967844201-00*	2	-
33	539200282	NUT *For 967844201-00*	6	-
33	539990250	WASHER *For all EXCEPT 967844201-00*	1	-
34	521996501	NUT *For all EXCEPT 967844201-00*	2	-
35	539112899	NUT, 5/16-18, NYLOC *For all EXCEPT 967844201-00*	13	-
36	525829101	NUT -	6	-
37	539976978	NUT *For 967844201-00*	2	-
37	873800400	NUT *For all EXCEPT 967844201-00*	4	-
38	819111116	WASHER *For all EXCEPT 967844201-00*	2	-
39	539990250	WASHER *For all EXCEPT 967844201-00*	1	-
40	819132416	WASHER -	2	-
41	539102653	WASHER *For 967844201-00*	4	-
42	539104763	CLIP *For 967844201-00*	8	-
43	539102653	WASHER *For 967844201-00*	4	-
62	575274801	KIT *For 967844201-00, NOT SHOWN PROTECTION FRAME*	1	-
1	586670402	PLATE	1	-
2	539976688	PULLEY	1	-
3	532175820	PULLEY	1	-

Ref.	Article N.	Description	Qty	Kit
4	510041603	ARM	1	-
5	574870901	DRIVE BELT	1	-
6	584994202	SHIELD	2	-
7	539102587	ABSORBER	2	-
8	510206301	PIVOT	1	-
9	525435601	PIVOT	1	-
10	539104763	CLIP	4	-
11	510254501	SHIELD	2	-
12	539114662	SHIELD, DUST	1	-
13	510254401	SPRING	1	-
14	872140610	BOLT	1	-
15	539130235	RHSNB 3/8-16 X 2.75 GR5 ZD	1	-
16	874490632	SCREW	1	-
17	874490512	BOLT	3	-
18	592858702	BOLT	9	-
19	874780852	BOLT	1	-
20	521991101	NUT	1	-
21	521996501	NUT	2	-
22	539112899	NUT, 5/16-18, NYLOC	5	-
23	539200282	NUT	4	-
24	539990613	NUT	1	-
25	539115528	1/2` CONTACT BELLSPR	1	-
26	819182212	WASHER	2	-
27	819141614	WASHER	1	-
28	539109562	WASHER	1	-
31	539111897	WASHER	1	-
1	574569101	TRANSMISSION *LEFT*	1	-
2	574569102	TRANSMISSION *RIGHT*	1	-
3	593278902	BRACKET *For 967177008-01, 967045501-00, 967844201-00*	1	-
3	575017102	BRACKET *For 967177007-01*	1	-
4	593279002	BRACKET *For 967177008-01, 967045501-00, 967844201-00*	1	-
4	575017002	BRACKET *For 967177007-01*	1	-
5	539131616	LINKAGE. LEFT BYPASS	1	-
6	539131618	LINKAGE	1	-

Ref.	Article N.	Description	Qty	Kit
7	574892101	HOSE ASSY	2	-
8	586067501	HOSE	1	-
9	585318201	TANK	1	-
10	584994202	SHIELD	2	-
11	539113466	OIL FILTER	2	-
12	530095646	FUEL FILTER	1	-
13	586072701	CAP	1	-
14	539976988	PIN	2	-
15	539102587	ABSORBER	2	-
16	539976988	PIN	2	-
17	539990643	BOLT	1	-
18	592858702	BOLT	9	-
19	539101721	SCREW *For 967177007-01*	4	-
19	539976978	NUT *For 967177008-01, 967045501-00, 967844201-00*	4	-
20	539112899	NUT, 5/16-18, NYLOC	2	-
21	574233801	SCREW	4	-
22	539990118	WASHER	4	-
23	539112899	NUT, 5/16-18, NYLOC	8	-
24	596204101	WASHER	2	-
25	539990118	WASHER	2	-
26	539990187	WASHER	4	-
27	539990055	WASHER	4	-
28	539990122	WASHER	2	-
1	585722303	FUEL TANK ASSY	1	-
2	539107593	CONSOLE	1	-
3	539102436	BATTERY	1	-
4	588107201	BRACKET *For 967045501-00, 967844201-00*	1	-
4	593634404	BRACKET *For 967177008-01*	1	-
4	510030001	BRACKET *For 967177007-01*	1	-
5	588030801	CABLE	1	-
6	588030701	CABLE	1	-
7	574841204	PLATE *For 967177007-01, 967045501-00, 967844201-00*	1	-
7	592877402	PLATE *For 967177008-01*	1	-

Ref.	Article N.	Description	Qty	Kit
8	582107602	SWITCH *For 967177007-01, 967177008-01, 967844201-00*	1	-
8	539131627	SWITCH *For 967045501-00*	1	-
9	574455401	SWITCH	1	-
10	581878301	LIGHT *For 967045501-00*	1	-
10	584971801	CHOKE *For 967844201-00*	1	-
10	574206903	CABLE *For 967177007-01, 967177008-01*	1	-
11	539102732	THROTTLE *For 967045501-00, 967844201-00*	1	-
11	539112438	THROTTLE CABLE *For 967177007-01, 967177008-01*	1	-
12	539133049	KNOB	1	-
13	586123901	FUEL HOSE *For 967177007-01, 967045501-00*	1	-
13	586123903	FUEL HOSE *For 967177008-01, 967844201-00*	1	-
14	576469201	FITTING	1	-
15	575018101	CAP	1	-
16	576618101	TANK VENT	1	-
17	539916325	VALVE *For 967844201-00*	1	-
18	576618201	GROMMET	1	-
19	539105245	GROMMET	1	-
20	539103178	NUT CAP	1	-
21	575436501	CLAMP	2	-
22	532123487	HOSE CLAMP *For 967844201-00*	4	-
23	587044810	HOSE *For 967844201-00*	2	-
24	587044539	HOSE *For 967045501-00*	1	-
24	587044536	HOSE *For 967177008-01, CUT TO LENGTH*	1	-
24	587044555	HOSE *For 967844201-00*	1	-
24	587044564	HOSE *For 967177007-01, CUT TO FIT*	1	-
25	574455501	KEY	1	-

Ref.	Article N.	Description	Qty	Kit
26	586161801	HOUR METER	1	-
28	582484201	SCREW	6	-
29	588843202	SUPPORT *For 967177008-01, 967844201-00*	2	-
29	539131671	SUPPORT *For 967177007-01, 967045501-00*	2	-
30	510064001	HOOK	2	-
31	532435395	TERMINAL COVER	1	-
32	539976934	SCREW *For 967177008-01, 967844201-00*	2	-
32	874780512	SCREW *For 967177007-01, 967045501-00*	2	-
33	872140506	BOLT *For 967177007-01, 967045501-00*	2	-
33	539990316	BOLT *For 967177008-01, 967844201-00*	2	-
34	539990411	SCREW *For 967045501-00, 967844201-00*	6	-
34	817490516	SCREW *For 967045501-00, 967844201-00*	3	-
35	539990411	SCREW *For 967045501-00, 967844201-00*	6	-
35	817490516	SCREW *For 967045501-00, 967844201-00*	3	-
36	539976977	NUT	2	-
37	539990997	NUT	2	-
38	539112899	NUT, 5/16-18, NYLOC	13	-
39	819070818	WASHER	4	-
40	819111116	WASHER	2	-
41	539990187	WASHER	2	-
42	532197802	SWITCH *For 967177008-01, 967177007-01*	1	-
42	539113792	SWITCH *For 967045501-00*	1	-
43	532109553	SWITCH *For 967177007-01, 967177008-01, 967045501-00*	2	-
44	581223001	PLATE *For 967177007-01, 967177008-01, 967045501-00*	2	-
45	574822701	SCREW *For 967177007-01, 967177008-01, 967045501-00*	4	-
63	589669901	HARNESS *For 967177007-01, 967844201-00*	1	-

Ref.	Article N.	Description	Qty	Kit
64	532409615	HARNESS *For 967177007-01, 967844201-00*	1	-
65	501279301	HARNESS *For 967045501-00*	1	-
66	900000002	DUMMY PART *For 967177008-01, 589 66 99-02 Harness w/Brake Switch*	1	-
1	581505401	DECK -	1	-
2	539104335	DRIVE BELT -	1	-
3	539113312	BLADE -	3	-
4	539131898	SPINDLE -	3	-
5	539103427	BUSHING -	1	-
6	539112169	BLADE BUSHING -	2	-
7	589766101	PULLEY -	3	-
8	539113300	PULLEY -	3	-
9	539112198	ARM -	1	-
10	539113319	SHIELD -	1	-
11	539113322	SHIELD -	1	-
12	584859402	BRACKET -	2	-
13	584859404	BRACKET -	2	-
14	539130901	CHUTE -	1	-
15	539113317	PLATE -	1	-
16	585323901	BEARING *For 967177008-01, 967045501-00*	3	-
16	532110485	BEARING *For 967177007-01, 967844201-00*	3	-
17	539103256	SPRING -	1	-
18	581606106	BRACKET	1	-

Ref.	Article N.	Description	Qty	Kit
		For 967844201-00		
18	581606102	BRACKET *For 967177007-01, 967177008-01, 967045501-00, ORG*	1	-
19	539130917	BRACKET -	1	-
20	532176066	ROLLER -	1	-
21	532179127	PIN -	1	-
22	539131859	PIN -	2	-
23	532133957	WHEEL -	2	-
24	539976998	NIPPLE -	1	-
25	876020412	SPLIT PIN -	2	-
26	581606102	BRACKET *For 967177007-01, 967177008-01, 967045501-00, ORG*	1	-
26	592964402	BRACKET *For 967177007-01, 967177008-01, 967045501-00*	1	-
27	532187291	SHAFT -	3	-
28	539104763	CLIP *For 967844201-00*	8	-
28	874780648	BOLT *For 967177007-01, 967177008-01, 967045501-00*	2	-
29	539108396	BOLT -	2	-
30	539990563	SCREW -	2	-
31	539976934	SCREW -	8	-
32	539990582	SCREW -	1	-
33	539103433	SCREW *For 967177007-01, 967844201-00*	1	-
33	589343201	MANDREL *For 967177008-01, 967045501-00*	1	-
34	874780520	BOLT -	2	-
35	539990799	BOLT -	3	-

Ref.	Article N.	Description	Qty	Kit
36	872110508	BOLT *For 967177007-01*	2	-
36	539107271	SCREW *For 967177008-01, 967045501-00, 967844201-00*	2	-
37	539100472	SCREW -	2	-
38	539102933	SCREW -	2	-
39	532193003	SCREW -	3	-
40	532137644	SCREW -	2	-
41	584953901	BOLT -	12	-
42	874780648	BOLT *For 967177007-01, 967177008-01, 967045501-00*	2	-
42	532400234	NUT *For 967177007-01, 967177008-01, 967045501-00*	3	-
43	539990717	NUT -	3	-
44	539990196	NUT -	2	-
45	539976979	NUT -	6	-
46	539101331	NUT *For 967177007-01*	1	-
46	873800800	NUT *For 967177008-01, 967045501-00, 967844201-00*	1	-
47	539112899	NUT, 5/16-18, NYLOC -	8	-
48	596134801	HEXAGON NUT -	3	-
49	539106504	WASHER -	2	-
50	819121414	WASHER *For 967844201-00*	10	-
50	539990692	WASHER *For 967177007-01, 967177008-01, 967045501-00*	11	-
51	539109600	WASHER -	8	-
52	539102243	WASHER -	1	-
53	539990550	WASHER	1	-

Ref.	Article N.	Description	Qty	Kit
		For 967177007-01		
53	819182212	WASHER *For 967177008-01, 967045501-00, 967844201-00*	1	-
54	532187690	WASHER -	3	-
55	819141614	WASHER -	3	-
1	510408301	PEDAL -	1	-
2	539110808	CROSS LINK -	2	-
3	586701701	SPACER -	2	-
4	539131861	SPACER. .3 -	1	-
5	586928702	LIFT -	1	-
6	584392702	PLATE -	2	-
7	539131897	BELLCRANK -	1	-
8	539131853	BELLCRANK -	1	-
9	588812102	BRACKET -	1	-
10	588812002	BRACKET -	1	-
11	539131566	LATCH -	1	-
12	539105059	ROPE -	1	-
13	539131791	MOUNT -	1	-
14	532195161	STUD -	4	-
15	539131792	SPRING -	1	-
16	539112896	BOLT -	1	-
17	539102642	SPRING -	1	-
18	539132734	SPRING. TORSION -	1	-

Ref.	Article N.	Description	Qty	Kit
19	539131850	HEIGHT. ADJUST. DECK -	1	-
20	539131860	PIVOT. LATCH. TRANSPORT -	1	-
21	539104808	SUPPORT -	4	-
22	539132182	PIN -	1	-
23	539132851	GRIP -	1	-
24	539115501	COTTER -	4	-
25	532194209	SPRING -	2	-
26	874780648	BOLT -	1	-
27	539990646	BOLT -	1	-
28	874780544	BOLT -	4	-
29	539108181	HCS 1/2-13 X 1-3/4 GR 8 ZD -	2	-
30	539990563	SCREW -	4	-
31	539112899	NUT, 5/16-18, NYLOC -	5	-
32	539976979	NUT -	4	-
33	873800800	NUT -	2	-
34	873900500	NUT -	2	-
35	539200282	NUT -	2	-
36	873900600	NUT -	4	-
37	819141614	WASHER -	1	-
38	539115528	1/2` CONTACT BELLSPR -	1	-
39	539109554	WASHER -	2	-
40	819191912	WASHER	2	-

Ref.	Article N.	Description	Qty	Kit
		-		
41	539991043	BUSHING -	10	-
1	510408301	PEDAL -	1	-
2	539110808	CROSS LINK -	2	-
3	586701701	SPACER -	2	-
4	539131861	SPACER. .3 -	1	-
5	586928702	LIFT -	1	-
6	584392702	PLATE -	2	-
7	539131897	BELLCRANK -	1	-
8	539131853	BELLCRANK -	1	-
9	539112223	STRUT -	2	-
10	539109693	LIFT CHAIN - 3 LINK -	4	-
11	539131566	LATCH -	1	-
12	539105059	ROPE -	1	-
13	539991043	BUSHING *For 967177007-01*	10	-
13	819211616	WASHER *For 967177008-01, 967045501-00*	1	-
14	539132017	MOUNT -	2	-
15	532194209	SPRING *For 967177008-01, 967045501-00*	1	-
16	539112896	BOLT -	1	-
17	539102642	SPRING *For 967177007-01*	1	-
17	539131790	SPRING *For 967177008-01, 967045501-00*	1	-
18	539132734	SPRING. TORSION -	1	-

Ref.	Article N.	Description	Qty	Kit
19	539131850	HEIGHT. ADJUST. DECK -	1	-
20	539131860	PIVOT. LATCH. TRANSPORT -	1	-
21	539104808	SUPPORT -	4	-
22	539132182	PIN -	1	-
24	539132851	GRIP -	1	-
25	539115501	COTTER -	6	-
26	874780544	BOLT *For 967177008-01, 967045501-00*	4	-
26	539101721	SCREW *For 967177007-01*	4	-
27	539108181	HCS 1/2-13 X 1-3/4 GR 8 ZD -	2	-
28	539976941	SCREW -	4	-
29	539101175	SCREW -	4	-
30	874780648	BOLT -	1	-
31	539990646	BOLT -	1	-
32	539108073	BOLT -	4	-
33	539200282	NUT -	2	-
34	539132019	NUT -	8	-
35	539102582	NUT -	8	-
36	539112899	NUT, 5/16-18, NYLOC *For 967177007-01*	5	-
37	539976979	NUT -	4	-
38	539101331	NUT *For 967177007-01*	1	-
38	873800800	NUT *For 967177008-01, 967045501-00*	1	-
39	819141614	WASHER	1	-

Ref.	Article N.	Description	Qty	Kit
		-		
40	539115528	1/2` CONTACT BELLSPR -	2	-
41	539109554	WASHER *For 967177007-01*	2	-
41	819182212	WASHER *For 967177008-01, 967045501-00*	2	-
42	539112899	NUT, 5/16-18, NYLOC *For 967177007-01*	5	-
43	539131791	MOUNT *For 967177007-01*	1	-
44	539131792	SPRING *For 967177007-01*	1	-
1	539132151	ARM -	1	-
2	539105036	GRIP -	1	-
3	575229602	BRACKET -	1	-
4	575229702	BRACKET -	1	-
5	586738802	LEVER -	1	-
6	575230201	SPRING -	2	-
7	575230301	SPRING -	2	-
8	586830002	MOUNT -	1	-
9	539132154	ACTUATOR -	1	-
10	539132153	BELLCRANK -	2	-
11	539132424	LINKAGE. BRAKE -	1	-
12	575229802	BRACKET -	2	-
13	539132161	BLADE BUSHING -	4	-
14	539104763	CLIP -	3	-
15	582121801	CABLE ASSY -	1	-

Ref.	Article N.	Description	Qty	Kit
16	582122001	CABLE ASSY -	2	-
17	505280001	TIE WRAP -	2	-
18	539990643	BOLT -	4	-
19	539108396	BOLT -	1	-
20	539990563	SCREW -	2	-
21	539990209	SCREW -	1	-
22	539110303	BOLT -	2	-
23	539990645	BOLT -	2	-
24	539990316	BOLT -	1	-
25	539131780	BOLT -	1	-
26	874490512	BOLT -	1	-
27	539112899	NUT, 5/16-18, NYLOC -	2	-
28	539990585	NUT -	5	-
29	539990717	NUT -	1	-
30	521996501	NUT -	2	-
31	539115617	NUT -	2	-
32	539200282	NUT -	2	-
33	539976978	NUT -	4	-
34	539107897	NUT -	2	-
35	539990055	WASHER -	8	-
36	539133007	WASHER -	1	-
37	539990122	WASHER	2	-

Ref.	Article N.	Description	Qty	Kit
		-		
38	819182212	WASHER -	1	-
39	532197802	SWITCH -	1	-
1	593564002	ARM -	1	-
2	539105036	GRIP -	1	-
3	593279202	BRACKET -	1	-
4	593279902	BRACKET -	1	-
5	590337701	GEAR -	1	-
6	575230201	SPRING -	2	-
7	575230301	SPRING -	2	-
8	590631502	MOUNT -	1	-
9	590204501	GEAR -	1	-
10	539990196	NUT -	2	-
11	596018303	BRACKET -	6	-
12	539104763	CLIP -	3	-
13	582121801	CABLE ASSY -	1	-
14	582122001	CABLE ASSY -	1	-
15	582121801	CABLE ASSY -	2	-
16	582122001	CABLE ASSY -	1	-
17	596018303	BRACKET -	1	-
18	593239802	ACTUATOR -	1	-
19	539990643	BOLT -	4	-

Ref.	Article N.	Description	Qty	Kit
20	539108396	BOLT -	1	-
21	525544001	BOLT -	3	-
22	539110303	BOLT -	2	-
23	539990645	BOLT -	2	-
24	539990316	BOLT -	1	-
25	539131780	BOLT -	1	-
26	874490512	BOLT -	1	-
27	525544001	BOLT -	1	-
28	539112899	NUT, 5/16-18, NYLOC -	1	-
29	539990585	NUT -	2	-
30	539990717	NUT -	1	-
31	521996501	NUT -	2	-
32	539115617	NUT -	2	-
33	539200282	NUT -	3	-
34	539976978	NUT -	4	-
35	539107897	NUT -	2	-
36	539990196	NUT -	2	-
37	539990055	WASHER -	8	-
38	819182212	WASHER -	1	-
39	539990122	WASHER -	2	-
40	819182212	WASHER -	1	-
41	595846701	BRAKE ASSY	1	-

Ref.	Article N.	Description	Qty	Kit
		NOT SHOWN		
1	501580402	SEAT -	1	-
2	539130359	BELT -	1	-
3	539103247	WIRE -	1	-
4	501762102	SUPPORT -	1	-
5	584916802	MOUNT -	2	-
6	587613301	SPRING -	2	-
7	539104763	CLIP -	8	-
8	539130793	STOP -	1	-
9	539119741	SWITCH -	1	-
10	584809102	SUPPORT -	1	-
11	584990102	SUPPORT -	1	-
12	584990202	SUPPORT -	1	-
13	539105974	GROMMET -	1	-
14	874490512	BOLT -	2	-
15	525544001	BOLT -	4	-
16	874490560	BOLT -	2	-
17	539990645	BOLT -	3	-
18	539115620	1/4-20X3/4 CARR BLT -	1	-
19	539130896	BOLT -	2	-
20	539112034	BOLT *For 967844201-00*	2	-
20	539124775	SCREW *For 967177007-01, 967177008-01, 967045501-00*	2	-

Ref.	Article N.	Description	Qty	Kit
21	872050506	BOLT *For 967844201-00*	2	-
22	539112899	NUT, 5/16-18, NYLOC -	9	-
23	539976979	NUT -	2	-
24	539990394	NUT -	2	-
25	539976978	NUT -	1	-
26	819141614	WASHER *For 967177007-01, 967177008-01, 967045501-00*	4	-
26	819091216	WASHER *For 967177007-01, 967177008-01, 967045501-00*	1	-
27	819141614	WASHER *For 967177007-01, 967177008-01, 967045501-00*	4	-
27	819091216	WASHER *For 967177007-01, 967177008-01, 967045501-00*	1	-
28	521996501	NUT *For 967177007-01, 967177008-01, 967045501-00*	1	-
29	873800500	LOCK NUT *For 967177007-01, 967177008-01, 967045501-00*	1	-
1	590090803	TUBE	1	-
2	590090804	TUBE	1	-
3	532109553	SWITCH	2	-
4	585124705	BRACKET	2	-
5	539438282	BEARING *For 967177007-01, 967177008-01, 967045501-00*	4	-
5	532438282	BEARING UNIT *For 967844201-00*	4	-
6	587187701	CONTROL	2	-
7	577420001	LEVER	2	-
8	584927201	SPACER	2	-
9	539102720	GAS SPRING	2	-
10	581437501	BLOCK	2	-
11	539102845	SPRING	2	-
12	576850301	SPRING	1	-
13	539131799	KNOB	1	-
14	574811401	ROD	2	-
15	539116689	ROD END COUPLER	2	-
16	588692502	ROD	2	-

Ref.	Article N.	Description	Qty	Kit
17	579764601	JOINT	2	-
18	581223001	PLATE *For 967844201-00*	2	-
19	576850402	SCREW *For 967177007-01, 967177008-01, 967045501-00*	2	-
19	539990585	NUT *For 967177007-01, 967177008-01, 967045501-00*	4	-
20	574822701	SCREW *For 967844201-00*	4	-
21	874780844	BOLT *For 967177007-01, 967177008-01, 967045501-00*	2	-
21	596580801	BOLT *NOTE: If you order 596580801 you will need to also order key 30 532423063 in the same quantity.*	1	-
22	874780844	BOLT *For 967177007-01, 967177008-01, 967045501-00*	2	-
22	539976935	SCREW *For 967177007-01, 967177008-01, 967045501-00*	4	-
23	539976935	SCREW *For 967177007-01, 967177008-01, 967045501-00*	4	-
23	525544001	BOLT *For 967177007-01, 967177008-01, 967045501-00*	4	-
24	525544001	BOLT *For 967177007-01, 967177008-01, 967045501-00*	4	-
24	874490512	BOLT *For 967177007-01, 967177008-01, 967045501-00*	8	-
25	576850402	SCREW *For 967177007-01, 967177008-01, 967045501-00*	2	-
25	874490512	BOLT *For 967177007-01, 967177008-01, 967045501-00*	8	-
26	539991073	NUT	2	-
27	539990585	NUT *For 967177007-01, 967177008-01, 967045501-00*	4	-
28	539990717	NUT *For 967177007-01, 967177008-01, 967045501-00*	6	-
28	539108010	NUT *For 967177007-01, 967177008-01, 967045501-00*	2	-
29	539990717	NUT *For 967177007-01, 967177008-01, 967045501-00*	4	-
29	539112899	NUT, 5/16-18, NYLOC *For 967177007-01, 967177008-01, 967045501-00*	10	-
30	819111116	WASHER *For 967177007-01, 967177008-01, 967045501-00*	12	-

Ref.	Article N.	Description	Qty	Kit
30	532423063	WASHER *NOTE: If you order 532423063 you will need to also order key 30 596580801 in the same quantity.*	1	-
31	539990223	NUT	4	-
32	819111116	WASHER *For 967177007-01, 967177008-01, 967045501-00*	14	-
33	539130894	GRIP *For 967177007-01, 967177008-01, 967045501-00*	2	-
34	874780520	BOLT *For 967177007-01, 967177008-01, 967045501-00*	5	-
35	539108010	NUT *For 967177007-01, 967177008-01, 967045501-00*	2	-
36	595305701	SCREW	2	-
1	586955401	WHEEL ASSY -	2	-
2	581199501	WHEEL ASSY -	2	-
3	582746401	TIRE -	2	-
3	539102543	BEARING -	4	-
4	539102535	CAP -	2	-
5	586921902	FORK -	2	-
6	539102851	SEALING -	2	-
7	575334901	SPACER -	2	-
8	539101474	NIPPLE -	2	-
9	539102889	SPLIT PIN -	2	-
10	539105517	BOLT -	2	-
11	539102852	NUT -	2	-
12	521991101	NUT -	2	-
13	587653902	NUT -	8	-
14	819182212	WASHER -	2	-

MOWER LIFT \/ DECK LIFT

For 967177007-01, 967177008-01, 967045501-00

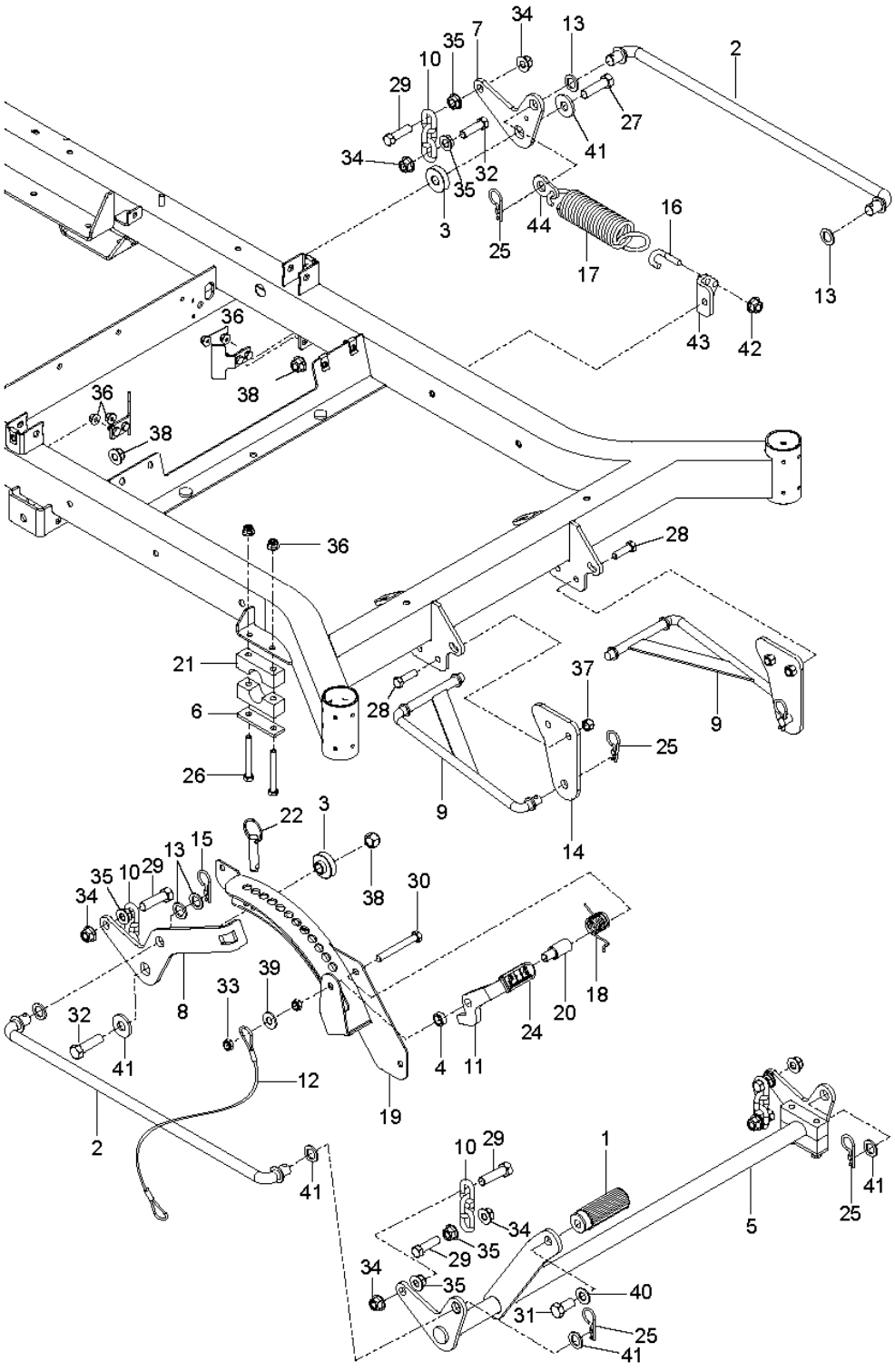

Ref.	Article N.	Description	Qty	Kit
1	586651402	PLATE -	1	-
2	574811001	PULLEY	1	-

Ref.	Article N.	Description	Qty	Kit
		-		
3	582042801	SOLENOID -	1	-
4	539101363	CLAMP -	1	-
5	584825501	HOSE ASSY -	1	-
6	575229902	BRACKET -	1	-
7	539102757	CABLE -	1	-
8	574607001	CLUTCH -	1	-
9	575017301	STOP -	1	-
10	539131604	MUFFLER ASSY -	1	-
11	583954501	TUBE -	1	-
12	583954801	TUBE -	1	-
13	586839701	GASKET -	2	-
14	532131563	COVER -	2	-
15	539102759	INSULATOR -	1	-
16	539912757	KEY -	1	-
17	539990071	BOLT -	1	-
18	817120616	SCREW -	4	-
19	539107271	SCREW -	2	-
20	874490512	BOLT -	8	-
21	581332802	BOLT -	1	-
22	539990302	HWST 1/4C X 3/8 -	1	-
23	539107475	BOLT -	2	-

Ref.	Article N.	Description	Qty	Kit
24	539108120	NUT -	4	-
25	539112899	NUT, 5/16-18, NYLOC -	10	-
26	539990053	WASHER -	1	-
27	539990247	WASHER -	1	-
1	586651402	PLATE	1	-
2	574846402	PLATE *For 967177008-01*	1	-
2	586670402	PLATE *For 967177007-01, 967045501-00*	1	-
3	574811001	PULLEY	1	-
4	539976688	PULLEY	1	-
5	532175820	PULLEY	1	-
6	574870901	DRIVE BELT	1	-
7	525435601	PIVOT	1	-
8	510206301	PIVOT	1	-
9	510041603	ARM	1	-
10	574607001	CLUTCH	1	-
11	575017302	STOP	1	-
12	539102757	CABLE *For 967177007-01, 967177008-01*	1	-
13	576701801	MUFFLER *For 967177007-01*	1	-
13	525750201	MUFFLER *For 967177008-01*	1	-
13	501451201	MUFFLER ASSY *For 967045501-00*	1	-
14	582042801	SOLENOID *For 967177007-01, 967177008-01*	1	-
15	510254401	SPRING	1	-
16	539114662	SHIELD, DUST	1	-
17	510254501	SHIELD	2	-
18	579150901	SHIELD *For 967177007-01, 967177008-01*	1	-
19	584825501	HOSE ASSY *For 967177008-01, 967045501-00*	1	-
20	522599001	ADAPTER *For 967177008-01*	1	-

Ref.	Article N.	Description	Qty	Kit
21	539101363	CLAMP *For 967177008-01, 967045501-00*	1	-
22	522837001	PLUG *For 967177008-01*	1	-
22	585807101	PLUG *For 967045501-00*	1	-
23	539912757	KEY	1	-
24	586839701	GASKET *For 967177007-01, 967177008-01*	2	-
25	532131563	COVER *For 967177007-01*	1	-
25	539102759	INSULATOR *For 967177008-01*	2	-
26	532131563	COVER *For 967177007-01*	2	-
27	539104763	CLIP	4	-
28	539100413	BOLT *For 967177007-01*	1	-
28	872140610	BOLT *For 967177008-01, 967045501-00*	1	-
29	872140622	BOLT *For 967045501-00*	1	-
29	539130235	RHSNB 3/8-16 X 2.75 GR5 ZD *For 967177007-01, 967177008-01*	1	-
30	872110508	BOLT *For 967177008-01*	2	-
31	581332802	BOLT	1	-
32	539103433	SCREW *For 967177007-01*	1	-
32	874780852	BOLT *For 967177008-01, 967045501-00*	1	-
33	525866201	BOLT *For 967177007-01*	1	-
33	874490632	SCREW *For 967177008-01, 967045501-00*	1	-
34	874490512	BOLT	11	-
35	874780408	BOLT *For 967045501-00*	1	-
35	539990071	BOLT *For 967177008-01*	1	-
36	817120616	SCREW *For 967177007-01, 967045501-00*	4	-

Ref.	Article N.	Description	Qty	Kit
36	539990563	SCREW *For 967177008-01*	4	-
37	592858702	BOLT	8	-
38	817490406	SCREW *For 967177008-01*	1	-
38	539990302	HWST 1/4C X 3/8 *For 967177007-01*	1	-
39	539990613	NUT *For 967177007-01*	1	-
40	539112899	NUT, 5/16-18, NYLOC	15	-
41	521991101	NUT	1	-
42	539200282	NUT	4	-
43	521996501	NUT *For 967177008-01, 967045501-00*	2	-
44	539108120	NUT *For 967177007-01, 967177008-01*	4	-
45	539990053	WASHER	1	-
46	539115528	1/2` CONTACT BELLSPR	1	-
47	539990247	WASHER	1	-
48	539109562	WASHER	1	-
50	539109554	WASHER *For 967177007-01*	2	-
50	819182212	WASHER *For 967177008-01, 967045501-00*	2	-
51	539111897	WASHER	1	-
52	819141614	WASHER	1	-
53	539990118	WASHER *For 967177008-01, 967045501-00*	4	-
54	539990613	NUT *For 967177007-01*	1	-
54	521996501	NUT *For 967177008-01, 967045501-00*	2	-
55	532183906	SCREW *For 967177007-01*	4	-
55	532192334	SCREW *For 967045501-00*	4	-
91	501279301	HARNESS *For 967045501-00*	1	-
92	586839901	GASKET *For 967045501-00, NOT SHOWN*	2	-
93	587450101	HARNESS *For 967045501-00*	1	-

Ref.	Article N.	Description	Qty	Kit
94	574825801	KIT *For 967045501-00, SPARK ARRESTOR*	1	-
1	501656001	FRAME -	1	-
2	586893002	GUARD -	1	-
3	586867702	SUPPORT -	1	-
4	586560101	BRACKET -	1	-
5	586560201	BRACKET -	1	-
6	539132744	PLATE -	1	-
7	539132380	PLATE -	1	-
8	594037402	BRACKET *For all EXCEPT 967844201-00, BLK*	1	-
8	587048702	BRACKET *For 967844201-00*	1	-
9	575245202	BRACKET -	2	-
10	575533602	MOUNT -	2	-
11	900000002	DUMMY PART *For all EXCEPT 967844201-00, 593 79 55-05 Guard, Skid Gray*	1	-
11	575230402	SHIELD *For 967844201-00*	1	-
12	539132859	HEAT SHIELD -	1	-
13	587990501	CAP -	2	-
14	593634302	STOP *For all EXCEPT 967844201-00*	2	-
14	505256401	STOP *For 967844201-00*	2	-
15	539102587	ABSORBER -	7	-
16	539105974	GROMMET -	1	-
17	522801401	BUMPER *For 967844201-00*	2	-
17	874490644	BOLT	2	-

Ref.	Article N.	Description	Qty	Kit
		For 967844201-00		
18	539104411	KNOB -	1	-
19	539200715	PIN *For 967844201-00*	2	-
19	874490512	BOLT *For 967844201-00*	1	-
20	539133006	BOLT *For 967844201-00*	2	-
20	574388001	PIN *For 967844201-00*	2	-
21	539104763	CLIP *For 967844201-00*	5	-
22	539133006	BOLT *For 967844201-00*	2	-
22	525544001	BOLT *For 967844201-00*	1	-
23	874490644	BOLT *For 967844201-00*	2	-
23	539102335	BOLT *For 967844201-00*	2	-
24	874490512	BOLT *For 967844201-00*	18	-
24	539109117	BOLT *For all EXCEPT 967844201-00*	2	-
25	872140508	BOLT *For all EXCEPT 967844201-00*	3	-
25	874490560	BOLT *For 967844201-00*	4	-
26	525544001	BOLT *For 967844201-00*	1	-
26	872110606	BOLT *For all EXCEPT 967844201-00*	6	-
27	539102335	BOLT *For 967844201-00*	2	-
27	539200282	NUT *For 967844201-00*	6	-
28	874490560	BOLT *For 967844201-00*	4	-
28	580754601	BOLT *For 967844201-00*	6	-
29	872140506	BOLT *For 967844201-00*	6	-

Ref.	Article N.	Description	Qty	Kit
29	521996501	NUT *For all EXCEPT 967844201-00*	2	-
30	539990208	SCREW *For 967844201-00*	3	-
30	539112899	NUT, 5/16-18, NYLOC *For all EXCEPT 967844201-00*	12	-
31	539990645	BOLT -	2	-
32	539990316	BOLT *For 967844201-00*	4	-
32	819111116	WASHER *For all EXCEPT 967844201-00*	2	-
33	539200282	NUT *For 967844201-00*	6	-
33	539990250	WASHER *For all EXCEPT 967844201-00*	1	-
34	521996501	NUT *For all EXCEPT 967844201-00*	2	-
35	539112899	NUT, 5/16-18, NYLOC *For all EXCEPT 967844201-00*	13	-
36	525829101	NUT -	6	-
37	539976978	NUT *For 967844201-00*	2	-
37	873800400	NUT *For all EXCEPT 967844201-00*	4	-
38	819111116	WASHER *For all EXCEPT 967844201-00*	2	-
39	539990250	WASHER *For all EXCEPT 967844201-00*	1	-
40	819132416	WASHER -	2	-
41	539102653	WASHER *For 967844201-00*	4	-
42	539104763	CLIP *For 967844201-00*	8	-
43	539102653	WASHER *For 967844201-00*	4	-
62	575274801	KIT *For 967844201-00, NOT SHOWN PROTECTION FRAME*	1	-
1	586670402	PLATE	1	-
2	539976688	PULLEY	1	-
3	532175820	PULLEY	1	-

Ref.	Article N.	Description	Qty	Kit
4	510041603	ARM	1	-
5	574870901	DRIVE BELT	1	-
6	584994202	SHIELD	2	-
7	539102587	ABSORBER	2	-
8	510206301	PIVOT	1	-
9	525435601	PIVOT	1	-
10	539104763	CLIP	4	-
11	510254501	SHIELD	2	-
12	539114662	SHIELD, DUST	1	-
13	510254401	SPRING	1	-
14	872140610	BOLT	1	-
15	539130235	RHSNB 3/8-16 X 2.75 GR5 ZD	1	-
16	874490632	SCREW	1	-
17	874490512	BOLT	3	-
18	592858702	BOLT	9	-
19	874780852	BOLT	1	-
20	521991101	NUT	1	-
21	521996501	NUT	2	-
22	539112899	NUT, 5/16-18, NYLOC	5	-
23	539200282	NUT	4	-
24	539990613	NUT	1	-
25	539115528	1/2` CONTACT BELLSPR	1	-
26	819182212	WASHER	2	-
27	819141614	WASHER	1	-
28	539109562	WASHER	1	-
31	539111897	WASHER	1	-
1	574569101	TRANSMISSION *LEFT*	1	-
2	574569102	TRANSMISSION *RIGHT*	1	-
3	593278902	BRACKET *For 967177008-01, 967045501-00, 967844201-00*	1	-
3	575017102	BRACKET *For 967177007-01*	1	-
4	593279002	BRACKET *For 967177008-01, 967045501-00, 967844201-00*	1	-
4	575017002	BRACKET *For 967177007-01*	1	-
5	539131616	LINKAGE. LEFT BYPASS	1	-
6	539131618	LINKAGE	1	-

Ref.	Article N.	Description	Qty	Kit
7	574892101	HOSE ASSY	2	-
8	586067501	HOSE	1	-
9	585318201	TANK	1	-
10	584994202	SHIELD	2	-
11	539113466	OIL FILTER	2	-
12	530095646	FUEL FILTER	1	-
13	586072701	CAP	1	-
14	539976988	PIN	2	-
15	539102587	ABSORBER	2	-
16	539976988	PIN	2	-
17	539990643	BOLT	1	-
18	592858702	BOLT	9	-
19	539101721	SCREW *For 967177007-01*	4	-
19	539976978	NUT *For 967177008-01, 967045501-00, 967844201-00*	4	-
20	539112899	NUT, 5/16-18, NYLOC	2	-
21	574233801	SCREW	4	-
22	539990118	WASHER	4	-
23	539112899	NUT, 5/16-18, NYLOC	8	-
24	596204101	WASHER	2	-
25	539990118	WASHER	2	-
26	539990187	WASHER	4	-
27	539990055	WASHER	4	-
28	539990122	WASHER	2	-
1	585722303	FUEL TANK ASSY	1	-
2	539107593	CONSOLE	1	-
3	539102436	BATTERY	1	-
4	588107201	BRACKET *For 967045501-00, 967844201-00*	1	-
4	593634404	BRACKET *For 967177008-01*	1	-
4	510030001	BRACKET *For 967177007-01*	1	-
5	588030801	CABLE	1	-
6	588030701	CABLE	1	-
7	574841204	PLATE *For 967177007-01, 967045501-00, 967844201-00*	1	-
7	592877402	PLATE *For 967177008-01*	1	-

Ref.	Article N.	Description	Qty	Kit
8	582107602	SWITCH *For 967177007-01, 967177008-01, 967844201-00*	1	-
8	539131627	SWITCH *For 967045501-00*	1	-
9	574455401	SWITCH	1	-
10	581878301	LIGHT *For 967045501-00*	1	-
10	584971801	CHOKE *For 967844201-00*	1	-
10	574206903	CABLE *For 967177007-01, 967177008-01*	1	-
11	539102732	THROTTLE *For 967045501-00, 967844201-00*	1	-
11	539112438	THROTTLE CABLE *For 967177007-01, 967177008-01*	1	-
12	539133049	KNOB	1	-
13	586123901	FUEL HOSE *For 967177007-01, 967045501-00*	1	-
13	586123903	FUEL HOSE *For 967177008-01, 967844201-00*	1	-
14	576469201	FITTING	1	-
15	575018101	CAP	1	-
16	576618101	TANK VENT	1	-
17	539916325	VALVE *For 967844201-00*	1	-
18	576618201	GROMMET	1	-
19	539105245	GROMMET	1	-
20	539103178	NUT CAP	1	-
21	575436501	CLAMP	2	-
22	532123487	HOSE CLAMP *For 967844201-00*	4	-
23	587044810	HOSE *For 967844201-00*	2	-
24	587044539	HOSE *For 967045501-00*	1	-
24	587044536	HOSE *For 967177008-01, CUT TO LENGTH*	1	-
24	587044555	HOSE *For 967844201-00*	1	-
24	587044564	HOSE *For 967177007-01, CUT TO FIT*	1	-
25	574455501	KEY	1	-

Ref.	Article N.	Description	Qty	Kit
26	586161801	HOUR METER	1	-
28	582484201	SCREW	6	-
29	588843202	SUPPORT *For 967177008-01, 967844201-00*	2	-
29	539131671	SUPPORT *For 967177007-01, 967045501-00*	2	-
30	510064001	HOOK	2	-
31	532435395	TERMINAL COVER	1	-
32	539976934	SCREW *For 967177008-01, 967844201-00*	2	-
32	874780512	SCREW *For 967177007-01, 967045501-00*	2	-
33	872140506	BOLT *For 967177007-01, 967045501-00*	2	-
33	539990316	BOLT *For 967177008-01, 967844201-00*	2	-
34	539990411	SCREW *For 967045501-00, 967844201-00*	6	-
34	817490516	SCREW *For 967045501-00, 967844201-00*	3	-
35	539990411	SCREW *For 967045501-00, 967844201-00*	6	-
35	817490516	SCREW *For 967045501-00, 967844201-00*	3	-
36	539976977	NUT	2	-
37	539990997	NUT	2	-
38	539112899	NUT, 5/16-18, NYLOC	13	-
39	819070818	WASHER	4	-
40	819111116	WASHER	2	-
41	539990187	WASHER	2	-
42	532197802	SWITCH *For 967177008-01, 967177007-01*	1	-
42	539113792	SWITCH *For 967045501-00*	1	-
43	532109553	SWITCH *For 967177007-01, 967177008-01, 967045501-00*	2	-
44	581223001	PLATE *For 967177007-01, 967177008-01, 967045501-00*	2	-
45	574822701	SCREW *For 967177007-01, 967177008-01, 967045501-00*	4	-
63	589669901	HARNESS *For 967177007-01, 967844201-00*	1	-

Ref.	Article N.	Description	Qty	Kit
64	532409615	HARNESS *For 967177007-01, 967844201-00*	1	-
65	501279301	HARNESS *For 967045501-00*	1	-
66	900000002	DUMMY PART *For 967177008-01, 589 66 99-02 Harness w/Brake Switch*	1	-
1	581505401	DECK -	1	-
2	539104335	DRIVE BELT -	1	-
3	539113312	BLADE -	3	-
4	539131898	SPINDLE -	3	-
5	539103427	BUSHING -	1	-
6	539112169	BLADE BUSHING -	2	-
7	589766101	PULLEY -	3	-
8	539113300	PULLEY -	3	-
9	539112198	ARM -	1	-
10	539113319	SHIELD -	1	-
11	539113322	SHIELD -	1	-
12	584859402	BRACKET -	2	-
13	584859404	BRACKET -	2	-
14	539130901	CHUTE -	1	-
15	539113317	PLATE -	1	-
16	585323901	BEARING *For 967177008-01, 967045501-00*	3	-
16	532110485	BEARING *For 967177007-01, 967844201-00*	3	-
17	539103256	SPRING -	1	-
18	581606106	BRACKET	1	-

Ref.	Article N.	Description	Qty	Kit
		For 967844201-00		
18	581606102	BRACKET *For 967177007-01, 967177008-01, 967045501-00, ORG*	1	-
19	539130917	BRACKET -	1	-
20	532176066	ROLLER -	1	-
21	532179127	PIN -	1	-
22	539131859	PIN -	2	-
23	532133957	WHEEL -	2	-
24	539976998	NIPPLE -	1	-
25	876020412	SPLIT PIN -	2	-
26	581606102	BRACKET *For 967177007-01, 967177008-01, 967045501-00, ORG*	1	-
26	592964402	BRACKET *For 967177007-01, 967177008-01, 967045501-00*	1	-
27	532187291	SHAFT -	3	-
28	539104763	CLIP *For 967844201-00*	8	-
28	874780648	BOLT *For 967177007-01, 967177008-01, 967045501-00*	2	-
29	539108396	BOLT -	2	-
30	539990563	SCREW -	2	-
31	539976934	SCREW -	8	-
32	539990582	SCREW -	1	-
33	539103433	SCREW *For 967177007-01, 967844201-00*	1	-
33	589343201	MANDREL *For 967177008-01, 967045501-00*	1	-
34	874780520	BOLT -	2	-
35	539990799	BOLT -	3	-

Ref.	Article N.	Description	Qty	Kit
36	872110508	BOLT *For 967177007-01*	2	-
36	539107271	SCREW *For 967177008-01, 967045501-00, 967844201-00*	2	-
37	539100472	SCREW -	2	-
38	539102933	SCREW -	2	-
39	532193003	SCREW -	3	-
40	532137644	SCREW -	2	-
41	584953901	BOLT -	12	-
42	874780648	BOLT *For 967177007-01, 967177008-01, 967045501-00*	2	-
42	532400234	NUT *For 967177007-01, 967177008-01, 967045501-00*	3	-
43	539990717	NUT -	3	-
44	539990196	NUT -	2	-
45	539976979	NUT -	6	-
46	539101331	NUT *For 967177007-01*	1	-
46	873800800	NUT *For 967177008-01, 967045501-00, 967844201-00*	1	-
47	539112899	NUT, 5/16-18, NYLOC -	8	-
48	596134801	HEXAGON NUT -	3	-
49	539106504	WASHER -	2	-
50	819121414	WASHER *For 967844201-00*	10	-
50	539990692	WASHER *For 967177007-01, 967177008-01, 967045501-00*	11	-
51	539109600	WASHER -	8	-
52	539102243	WASHER -	1	-
53	539990550	WASHER	1	-

Ref.	Article N.	Description	Qty	Kit
		For 967177007-01		
53	819182212	WASHER *For 967177008-01, 967045501-00, 967844201-00*	1	-
54	532187690	WASHER -	3	-
55	819141614	WASHER -	3	-
1	510408301	PEDAL -	1	-
2	539110808	CROSS LINK -	2	-
3	586701701	SPACER -	2	-
4	539131861	SPACER. .3 -	1	-
5	586928702	LIFT -	1	-
6	584392702	PLATE -	2	-
7	539131897	BELLCRANK -	1	-
8	539131853	BELLCRANK -	1	-
9	588812102	BRACKET -	1	-
10	588812002	BRACKET -	1	-
11	539131566	LATCH -	1	-
12	539105059	ROPE -	1	-
13	539131791	MOUNT -	1	-
14	532195161	STUD -	4	-
15	539131792	SPRING -	1	-
16	539112896	BOLT -	1	-
17	539102642	SPRING -	1	-
18	539132734	SPRING. TORSION -	1	-

Ref.	Article N.	Description	Qty	Kit
19	539131850	HEIGHT. ADJUST. DECK -	1	-
20	539131860	PIVOT. LATCH. TRANSPORT -	1	-
21	539104808	SUPPORT -	4	-
22	539132182	PIN -	1	-
23	539132851	GRIP -	1	-
24	539115501	COTTER -	4	-
25	532194209	SPRING -	2	-
26	874780648	BOLT -	1	-
27	539990646	BOLT -	1	-
28	874780544	BOLT -	4	-
29	539108181	HCS 1/2-13 X 1-3/4 GR 8 ZD -	2	-
30	539990563	SCREW -	4	-
31	539112899	NUT, 5/16-18, NYLOC -	5	-
32	539976979	NUT -	4	-
33	873800800	NUT -	2	-
34	873900500	NUT -	2	-
35	539200282	NUT -	2	-
36	873900600	NUT -	4	-
37	819141614	WASHER -	1	-
38	539115528	1/2` CONTACT BELLSPR -	1	-
39	539109554	WASHER -	2	-
40	819191912	WASHER	2	-

Ref.	Article N.	Description	Qty	Kit
		-		
41	539991043	BUSHING -	10	-
1	510408301	PEDAL -	1	-
2	539110808	CROSS LINK -	2	-
3	586701701	SPACER -	2	-
4	539131861	SPACER. .3 -	1	-
5	586928702	LIFT -	1	-
6	584392702	PLATE -	2	-
7	539131897	BELLCRANK -	1	-
8	539131853	BELLCRANK -	1	-
9	539112223	STRUT -	2	-
10	539109693	LIFT CHAIN - 3 LINK -	4	-
11	539131566	LATCH -	1	-
12	539105059	ROPE -	1	-
13	539991043	BUSHING *For 967177007-01*	10	-
13	819211616	WASHER *For 967177008-01, 967045501-00*	1	-
14	539132017	MOUNT -	2	-
15	532194209	SPRING *For 967177008-01, 967045501-00*	1	-
16	539112896	BOLT -	1	-
17	539102642	SPRING *For 967177007-01*	1	-
17	539131790	SPRING *For 967177008-01, 967045501-00*	1	-
18	539132734	SPRING. TORSION -	1	-

Ref.	Article N.	Description	Qty	Kit
19	539131850	HEIGHT. ADJUST. DECK -	1	-
20	539131860	PIVOT. LATCH. TRANSPORT -	1	-
21	539104808	SUPPORT -	4	-
22	539132182	PIN -	1	-
24	539132851	GRIP -	1	-
25	539115501	COTTER -	6	-
26	874780544	BOLT *For 967177008-01, 967045501-00*	4	-
26	539101721	SCREW *For 967177007-01*	4	-
27	539108181	HCS 1/2-13 X 1-3/4 GR 8 ZD -	2	-
28	539976941	SCREW -	4	-
29	539101175	SCREW -	4	-
30	874780648	BOLT -	1	-
31	539990646	BOLT -	1	-
32	539108073	BOLT -	4	-
33	539200282	NUT -	2	-
34	539132019	NUT -	8	-
35	539102582	NUT -	8	-
36	539112899	NUT, 5/16-18, NYLOC *For 967177007-01*	5	-
37	539976979	NUT -	4	-
38	539101331	NUT *For 967177007-01*	1	-
38	873800800	NUT *For 967177008-01, 967045501-00*	1	-
39	819141614	WASHER	1	-

Ref.	Article N.	Description	Qty	Kit
		-		
40	539115528	1/2` CONTACT BELLSPR -	2	-
41	539109554	WASHER *For 967177007-01*	2	-
41	819182212	WASHER *For 967177008-01, 967045501-00*	2	-
42	539112899	NUT, 5/16-18, NYLOC *For 967177007-01*	5	-
43	539131791	MOUNT *For 967177007-01*	1	-
44	539131792	SPRING *For 967177007-01*	1	-
1	539132151	ARM -	1	-
2	539105036	GRIP -	1	-
3	575229602	BRACKET -	1	-
4	575229702	BRACKET -	1	-
5	586738802	LEVER -	1	-
6	575230201	SPRING -	2	-
7	575230301	SPRING -	2	-
8	586830002	MOUNT -	1	-
9	539132154	ACTUATOR -	1	-
10	539132153	BELLCRANK -	2	-
11	539132424	LINKAGE. BRAKE -	1	-
12	575229802	BRACKET -	2	-
13	539132161	BLADE BUSHING -	4	-
14	539104763	CLIP -	3	-
15	582121801	CABLE ASSY -	1	-

Ref.	Article N.	Description	Qty	Kit
16	582122001	CABLE ASSY -	2	-
17	505280001	TIE WRAP -	2	-
18	539990643	BOLT -	4	-
19	539108396	BOLT -	1	-
20	539990563	SCREW -	2	-
21	539990209	SCREW -	1	-
22	539110303	BOLT -	2	-
23	539990645	BOLT -	2	-
24	539990316	BOLT -	1	-
25	539131780	BOLT -	1	-
26	874490512	BOLT -	1	-
27	539112899	NUT, 5/16-18, NYLOC -	2	-
28	539990585	NUT -	5	-
29	539990717	NUT -	1	-
30	521996501	NUT -	2	-
31	539115617	NUT -	2	-
32	539200282	NUT -	2	-
33	539976978	NUT -	4	-
34	539107897	NUT -	2	-
35	539990055	WASHER -	8	-
36	539133007	WASHER -	1	-
37	539990122	WASHER	2	-

Ref.	Article N.	Description	Qty	Kit
		-		
38	819182212	WASHER -	1	-
39	532197802	SWITCH -	1	-
1	593564002	ARM -	1	-
2	539105036	GRIP -	1	-
3	593279202	BRACKET -	1	-
4	593279902	BRACKET -	1	-
5	590337701	GEAR -	1	-
6	575230201	SPRING -	2	-
7	575230301	SPRING -	2	-
8	590631502	MOUNT -	1	-
9	590204501	GEAR -	1	-
10	539990196	NUT -	2	-
11	596018303	BRACKET -	6	-
12	539104763	CLIP -	3	-
13	582121801	CABLE ASSY -	1	-
14	582122001	CABLE ASSY -	1	-
15	582121801	CABLE ASSY -	2	-
16	582122001	CABLE ASSY -	1	-
17	596018303	BRACKET -	1	-
18	593239802	ACTUATOR -	1	-
19	539990643	BOLT -	4	-

Ref.	Article N.	Description	Qty	Kit
20	539108396	BOLT -	1	-
21	525544001	BOLT -	3	-
22	539110303	BOLT -	2	-
23	539990645	BOLT -	2	-
24	539990316	BOLT -	1	-
25	539131780	BOLT -	1	-
26	874490512	BOLT -	1	-
27	525544001	BOLT -	1	-
28	539112899	NUT, 5/16-18, NYLOC -	1	-
29	539990585	NUT -	2	-
30	539990717	NUT -	1	-
31	521996501	NUT -	2	-
32	539115617	NUT -	2	-
33	539200282	NUT -	3	-
34	539976978	NUT -	4	-
35	539107897	NUT -	2	-
36	539990196	NUT -	2	-
37	539990055	WASHER -	8	-
38	819182212	WASHER -	1	-
39	539990122	WASHER -	2	-
40	819182212	WASHER -	1	-
41	595846701	BRAKE ASSY	1	-

Ref.	Article N.	Description	Qty	Kit
		NOT SHOWN		
1	501580402	SEAT -	1	-
2	539130359	BELT -	1	-
3	539103247	WIRE -	1	-
4	501762102	SUPPORT -	1	-
5	584916802	MOUNT -	2	-
6	587613301	SPRING -	2	-
7	539104763	CLIP -	8	-
8	539130793	STOP -	1	-
9	539119741	SWITCH -	1	-
10	584809102	SUPPORT -	1	-
11	584990102	SUPPORT -	1	-
12	584990202	SUPPORT -	1	-
13	539105974	GROMMET -	1	-
14	874490512	BOLT -	2	-
15	525544001	BOLT -	4	-
16	874490560	BOLT -	2	-
17	539990645	BOLT -	3	-
18	539115620	1/4-20X3/4 CARR BLT -	1	-
19	539130896	BOLT -	2	-
20	539112034	BOLT *For 967844201-00*	2	-
20	539124775	SCREW *For 967177007-01, 967177008-01, 967045501-00*	2	-

Ref.	Article N.	Description	Qty	Kit
21	872050506	BOLT *For 967844201-00*	2	-
22	539112899	NUT, 5/16-18, NYLOC -	9	-
23	539976979	NUT -	2	-
24	539990394	NUT -	2	-
25	539976978	NUT -	1	-
26	819141614	WASHER *For 967177007-01, 967177008-01, 967045501-00*	4	-
26	819091216	WASHER *For 967177007-01, 967177008-01, 967045501-00*	1	-
27	819141614	WASHER *For 967177007-01, 967177008-01, 967045501-00*	4	-
27	819091216	WASHER *For 967177007-01, 967177008-01, 967045501-00*	1	-
28	521996501	NUT *For 967177007-01, 967177008-01, 967045501-00*	1	-
29	873800500	LOCK NUT *For 967177007-01, 967177008-01, 967045501-00*	1	-
1	590090803	TUBE	1	-
2	590090804	TUBE	1	-
3	532109553	SWITCH	2	-
4	585124705	BRACKET	2	-
5	539438282	BEARING *For 967177007-01, 967177008-01, 967045501-00*	4	-
5	532438282	BEARING UNIT *For 967844201-00*	4	-
6	587187701	CONTROL	2	-
7	577420001	LEVER	2	-
8	584927201	SPACER	2	-
9	539102720	GAS SPRING	2	-
10	581437501	BLOCK	2	-
11	539102845	SPRING	2	-
12	576850301	SPRING	1	-
13	539131799	KNOB	1	-
14	574811401	ROD	2	-
15	539116689	ROD END COUPLER	2	-
16	588692502	ROD	2	-

Ref.	Article N.	Description	Qty	Kit
17	579764601	JOINT	2	-
18	581223001	PLATE *For 967844201-00*	2	-
19	576850402	SCREW *For 967177007-01, 967177008-01, 967045501-00*	2	-
19	539990585	NUT *For 967177007-01, 967177008-01, 967045501-00*	4	-
20	574822701	SCREW *For 967844201-00*	4	-
21	874780844	BOLT *For 967177007-01, 967177008-01, 967045501-00*	2	-
21	596580801	BOLT *NOTE: If you order 596580801 you will need to also order key 30 532423063 in the same quantity.*	1	-
22	874780844	BOLT *For 967177007-01, 967177008-01, 967045501-00*	2	-
22	539976935	SCREW *For 967177007-01, 967177008-01, 967045501-00*	4	-
23	539976935	SCREW *For 967177007-01, 967177008-01, 967045501-00*	4	-
23	525544001	BOLT *For 967177007-01, 967177008-01, 967045501-00*	4	-
24	525544001	BOLT *For 967177007-01, 967177008-01, 967045501-00*	4	-
24	874490512	BOLT *For 967177007-01, 967177008-01, 967045501-00*	8	-
25	576850402	SCREW *For 967177007-01, 967177008-01, 967045501-00*	2	-
25	874490512	BOLT *For 967177007-01, 967177008-01, 967045501-00*	8	-
26	539991073	NUT	2	-
27	539990585	NUT *For 967177007-01, 967177008-01, 967045501-00*	4	-
28	539990717	NUT *For 967177007-01, 967177008-01, 967045501-00*	6	-
28	539108010	NUT *For 967177007-01, 967177008-01, 967045501-00*	2	-
29	539990717	NUT *For 967177007-01, 967177008-01, 967045501-00*	4	-
29	539112899	NUT, 5/16-18, NYLOC *For 967177007-01, 967177008-01, 967045501-00*	10	-
30	819111116	WASHER *For 967177007-01, 967177008-01, 967045501-00*	12	-

Ref.	Article N.	Description	Qty	Kit
30	532423063	WASHER *NOTE: If you order 532423063 you will need to also order key 30 596580801 in the same quantity.*	1	-
31	539990223	NUT	4	-
32	819111116	WASHER *For 967177007-01, 967177008-01, 967045501-00*	14	-
33	539130894	GRIP *For 967177007-01, 967177008-01, 967045501-00*	2	-
34	874780520	BOLT *For 967177007-01, 967177008-01, 967045501-00*	5	-
35	539108010	NUT *For 967177007-01, 967177008-01, 967045501-00*	2	-
36	595305701	SCREW	2	-
1	586955401	WHEEL ASSY -	2	-
2	581199501	WHEEL ASSY -	2	-
3	582746401	TIRE -	2	-
3	539102543	BEARING -	4	-
4	539102535	CAP -	2	-
5	586921902	FORK -	2	-
6	539102851	SEALING -	2	-
7	575334901	SPACER -	2	-
8	539101474	NIPPLE -	2	-
9	539102889	SPLIT PIN -	2	-
10	539105517	BOLT -	2	-
11	539102852	NUT -	2	-
12	521991101	NUT -	2	-
13	587653902	NUT -	8	-
14	819182212	WASHER -	2	-

PARKING BRAKE

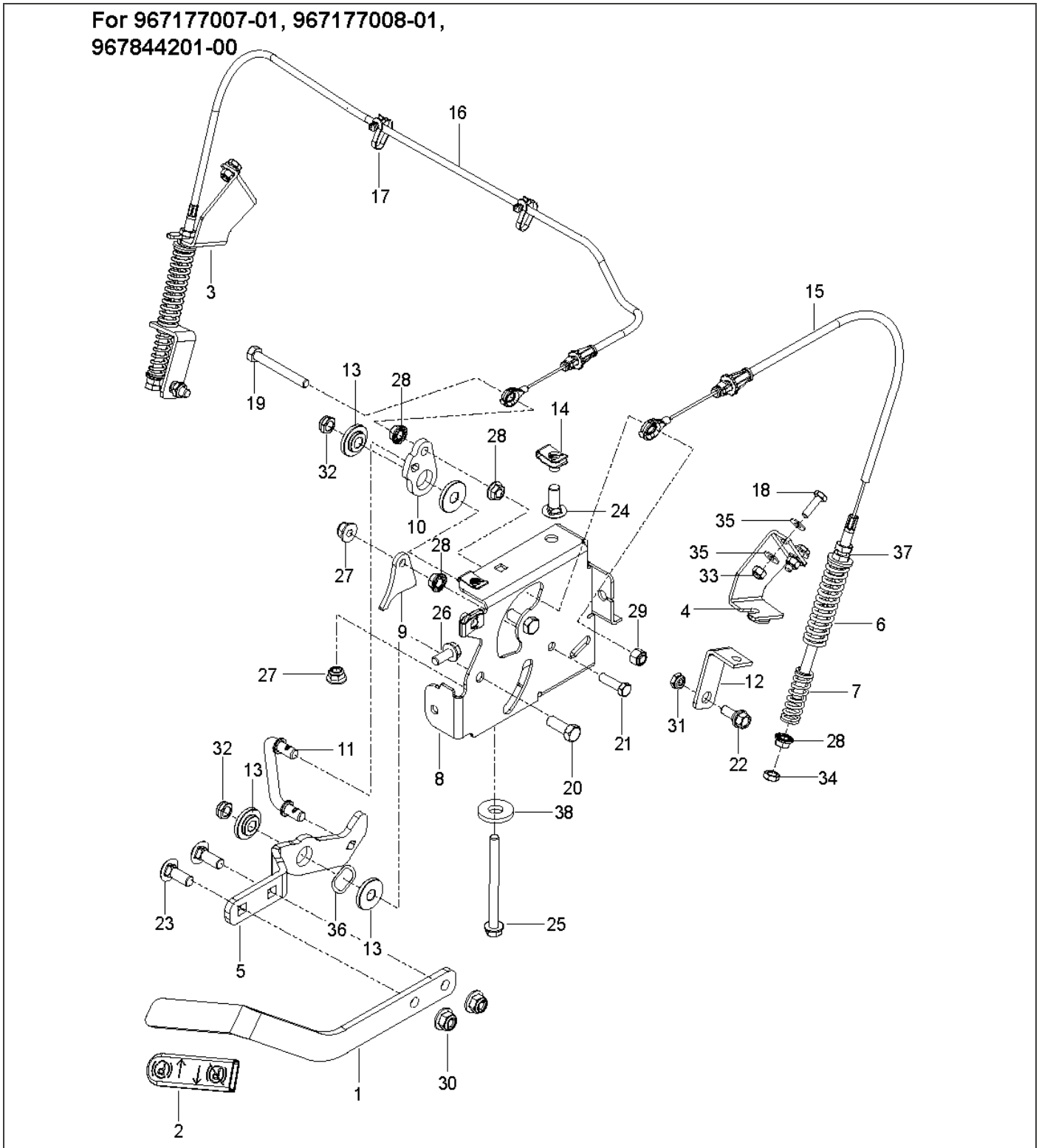

Ref.	Article N.	Description	Qty	Kit
1	586651402	PLATE -	1	-
2	574811001	PULLEY	1	-

Ref.	Article N.	Description	Qty	Kit
		-		
3	582042801	SOLENOID -	1	-
4	539101363	CLAMP -	1	-
5	584825501	HOSE ASSY -	1	-
6	575229902	BRACKET -	1	-
7	539102757	CABLE -	1	-
8	574607001	CLUTCH -	1	-
9	575017301	STOP -	1	-
10	539131604	MUFFLER ASSY -	1	-
11	583954501	TUBE -	1	-
12	583954801	TUBE -	1	-
13	586839701	GASKET -	2	-
14	532131563	COVER -	2	-
15	539102759	INSULATOR -	1	-
16	539912757	KEY -	1	-
17	539990071	BOLT -	1	-
18	817120616	SCREW -	4	-
19	539107271	SCREW -	2	-
20	874490512	BOLT -	8	-
21	581332802	BOLT -	1	-
22	539990302	HWST 1/4C X 3/8 -	1	-
23	539107475	BOLT -	2	-

Ref.	Article N.	Description	Qty	Kit
24	539108120	NUT -	4	-
25	539112899	NUT, 5/16-18, NYLOC -	10	-
26	539990053	WASHER -	1	-
27	539990247	WASHER -	1	-
1	586651402	PLATE	1	-
2	574846402	PLATE *For 967177008-01*	1	-
2	586670402	PLATE *For 967177007-01, 967045501-00*	1	-
3	574811001	PULLEY	1	-
4	539976688	PULLEY	1	-
5	532175820	PULLEY	1	-
6	574870901	DRIVE BELT	1	-
7	525435601	PIVOT	1	-
8	510206301	PIVOT	1	-
9	510041603	ARM	1	-
10	574607001	CLUTCH	1	-
11	575017302	STOP	1	-
12	539102757	CABLE *For 967177007-01, 967177008-01*	1	-
13	576701801	MUFFLER *For 967177007-01*	1	-
13	525750201	MUFFLER *For 967177008-01*	1	-
13	501451201	MUFFLER ASSY *For 967045501-00*	1	-
14	582042801	SOLENOID *For 967177007-01, 967177008-01*	1	-
15	510254401	SPRING	1	-
16	539114662	SHIELD, DUST	1	-
17	510254501	SHIELD	2	-
18	579150901	SHIELD *For 967177007-01, 967177008-01*	1	-
19	584825501	HOSE ASSY *For 967177008-01, 967045501-00*	1	-
20	522599001	ADAPTER *For 967177008-01*	1	-

Ref.	Article N.	Description	Qty	Kit
21	539101363	CLAMP *For 967177008-01, 967045501-00*	1	-
22	522837001	PLUG *For 967177008-01*	1	-
22	585807101	PLUG *For 967045501-00*	1	-
23	539912757	KEY	1	-
24	586839701	GASKET *For 967177007-01, 967177008-01*	2	-
25	532131563	COVER *For 967177007-01*	1	-
25	539102759	INSULATOR *For 967177008-01*	2	-
26	532131563	COVER *For 967177007-01*	2	-
27	539104763	CLIP	4	-
28	539100413	BOLT *For 967177007-01*	1	-
28	872140610	BOLT *For 967177008-01, 967045501-00*	1	-
29	872140622	BOLT *For 967045501-00*	1	-
29	539130235	RHSNB 3/8-16 X 2.75 GR5 ZD *For 967177007-01, 967177008-01*	1	-
30	872110508	BOLT *For 967177008-01*	2	-
31	581332802	BOLT	1	-
32	539103433	SCREW *For 967177007-01*	1	-
32	874780852	BOLT *For 967177008-01, 967045501-00*	1	-
33	525866201	BOLT *For 967177007-01*	1	-
33	874490632	SCREW *For 967177008-01, 967045501-00*	1	-
34	874490512	BOLT	11	-
35	874780408	BOLT *For 967045501-00*	1	-
35	539990071	BOLT *For 967177008-01*	1	-
36	817120616	SCREW *For 967177007-01, 967045501-00*	4	-

Ref.	Article N.	Description	Qty	Kit
36	539990563	SCREW *For 967177008-01*	4	-
37	592858702	BOLT	8	-
38	817490406	SCREW *For 967177008-01*	1	-
38	539990302	HWST 1/4C X 3/8 *For 967177007-01*	1	-
39	539990613	NUT *For 967177007-01*	1	-
40	539112899	NUT, 5/16-18, NYLOC	15	-
41	521991101	NUT	1	-
42	539200282	NUT	4	-
43	521996501	NUT *For 967177008-01, 967045501-00*	2	-
44	539108120	NUT *For 967177007-01, 967177008-01*	4	-
45	539990053	WASHER	1	-
46	539115528	1/2` CONTACT BELLSPR	1	-
47	539990247	WASHER	1	-
48	539109562	WASHER	1	-
50	539109554	WASHER *For 967177007-01*	2	-
50	819182212	WASHER *For 967177008-01, 967045501-00*	2	-
51	539111897	WASHER	1	-
52	819141614	WASHER	1	-
53	539990118	WASHER *For 967177008-01, 967045501-00*	4	-
54	539990613	NUT *For 967177007-01*	1	-
54	521996501	NUT *For 967177008-01, 967045501-00*	2	-
55	532183906	SCREW *For 967177007-01*	4	-
55	532192334	SCREW *For 967045501-00*	4	-
91	501279301	HARNESS *For 967045501-00*	1	-
92	586839901	GASKET *For 967045501-00, NOT SHOWN*	2	-
93	587450101	HARNESS *For 967045501-00*	1	-

Ref.	Article N.	Description	Qty	Kit
94	574825801	KIT *For 967045501-00, SPARK ARRESTOR*	1	-
1	501656001	FRAME -	1	-
2	586893002	GUARD -	1	-
3	586867702	SUPPORT -	1	-
4	586560101	BRACKET -	1	-
5	586560201	BRACKET -	1	-
6	539132744	PLATE -	1	-
7	539132380	PLATE -	1	-
8	594037402	BRACKET *For all EXCEPT 967844201-00, BLK*	1	-
8	587048702	BRACKET *For 967844201-00*	1	-
9	575245202	BRACKET -	2	-
10	575533602	MOUNT -	2	-
11	900000002	DUMMY PART *For all EXCEPT 967844201-00, 593 79 55-05 Guard, Skid Gray*	1	-
11	575230402	SHIELD *For 967844201-00*	1	-
12	539132859	HEAT SHIELD -	1	-
13	587990501	CAP -	2	-
14	593634302	STOP *For all EXCEPT 967844201-00*	2	-
14	505256401	STOP *For 967844201-00*	2	-
15	539102587	ABSORBER -	7	-
16	539105974	GROMMET -	1	-
17	522801401	BUMPER *For 967844201-00*	2	-
17	874490644	BOLT	2	-

Ref.	Article N.	Description	Qty	Kit
		For 967844201-00		
18	539104411	KNOB -	1	-
19	539200715	PIN *For 967844201-00*	2	-
19	874490512	BOLT *For 967844201-00*	1	-
20	539133006	BOLT *For 967844201-00*	2	-
20	574388001	PIN *For 967844201-00*	2	-
21	539104763	CLIP *For 967844201-00*	5	-
22	539133006	BOLT *For 967844201-00*	2	-
22	525544001	BOLT *For 967844201-00*	1	-
23	874490644	BOLT *For 967844201-00*	2	-
23	539102335	BOLT *For 967844201-00*	2	-
24	874490512	BOLT *For 967844201-00*	18	-
24	539109117	BOLT *For all EXCEPT 967844201-00*	2	-
25	872140508	BOLT *For all EXCEPT 967844201-00*	3	-
25	874490560	BOLT *For 967844201-00*	4	-
26	525544001	BOLT *For 967844201-00*	1	-
26	872110606	BOLT *For all EXCEPT 967844201-00*	6	-
27	539102335	BOLT *For 967844201-00*	2	-
27	539200282	NUT *For 967844201-00*	6	-
28	874490560	BOLT *For 967844201-00*	4	-
28	580754601	BOLT *For 967844201-00*	6	-
29	872140506	BOLT *For 967844201-00*	6	-

Ref.	Article N.	Description	Qty	Kit
29	521996501	NUT *For all EXCEPT 967844201-00*	2	-
30	539990208	SCREW *For 967844201-00*	3	-
30	539112899	NUT, 5/16-18, NYLOC *For all EXCEPT 967844201-00*	12	-
31	539990645	BOLT -	2	-
32	539990316	BOLT *For 967844201-00*	4	-
32	819111116	WASHER *For all EXCEPT 967844201-00*	2	-
33	539200282	NUT *For 967844201-00*	6	-
33	539990250	WASHER *For all EXCEPT 967844201-00*	1	-
34	521996501	NUT *For all EXCEPT 967844201-00*	2	-
35	539112899	NUT, 5/16-18, NYLOC *For all EXCEPT 967844201-00*	13	-
36	525829101	NUT -	6	-
37	539976978	NUT *For 967844201-00*	2	-
37	873800400	NUT *For all EXCEPT 967844201-00*	4	-
38	819111116	WASHER *For all EXCEPT 967844201-00*	2	-
39	539990250	WASHER *For all EXCEPT 967844201-00*	1	-
40	819132416	WASHER -	2	-
41	539102653	WASHER *For 967844201-00*	4	-
42	539104763	CLIP *For 967844201-00*	8	-
43	539102653	WASHER *For 967844201-00*	4	-
62	575274801	KIT *For 967844201-00, NOT SHOWN PROTECTION FRAME*	1	-
1	586670402	PLATE	1	-
2	539976688	PULLEY	1	-
3	532175820	PULLEY	1	-

Ref.	Article N.	Description	Qty	Kit
4	510041603	ARM	1	-
5	574870901	DRIVE BELT	1	-
6	584994202	SHIELD	2	-
7	539102587	ABSORBER	2	-
8	510206301	PIVOT	1	-
9	525435601	PIVOT	1	-
10	539104763	CLIP	4	-
11	510254501	SHIELD	2	-
12	539114662	SHIELD, DUST	1	-
13	510254401	SPRING	1	-
14	872140610	BOLT	1	-
15	539130235	RHSNB 3/8-16 X 2.75 GR5 ZD	1	-
16	874490632	SCREW	1	-
17	874490512	BOLT	3	-
18	592858702	BOLT	9	-
19	874780852	BOLT	1	-
20	521991101	NUT	1	-
21	521996501	NUT	2	-
22	539112899	NUT, 5/16-18, NYLOC	5	-
23	539200282	NUT	4	-
24	539990613	NUT	1	-
25	539115528	1/2` CONTACT BELLSPR	1	-
26	819182212	WASHER	2	-
27	819141614	WASHER	1	-
28	539109562	WASHER	1	-
31	539111897	WASHER	1	-
1	574569101	TRANSMISSION *LEFT*	1	-
2	574569102	TRANSMISSION *RIGHT*	1	-
3	593278902	BRACKET *For 967177008-01, 967045501-00, 967844201-00*	1	-
3	575017102	BRACKET *For 967177007-01*	1	-
4	593279002	BRACKET *For 967177008-01, 967045501-00, 967844201-00*	1	-
4	575017002	BRACKET *For 967177007-01*	1	-
5	539131616	LINKAGE. LEFT BYPASS	1	-
6	539131618	LINKAGE	1	-

Ref.	Article N.	Description	Qty	Kit
7	574892101	HOSE ASSY	2	-
8	586067501	HOSE	1	-
9	585318201	TANK	1	-
10	584994202	SHIELD	2	-
11	539113466	OIL FILTER	2	-
12	530095646	FUEL FILTER	1	-
13	586072701	CAP	1	-
14	539976988	PIN	2	-
15	539102587	ABSORBER	2	-
16	539976988	PIN	2	-
17	539990643	BOLT	1	-
18	592858702	BOLT	9	-
19	539101721	SCREW *For 967177007-01*	4	-
19	539976978	NUT *For 967177008-01, 967045501-00, 967844201-00*	4	-
20	539112899	NUT, 5/16-18, NYLOC	2	-
21	574233801	SCREW	4	-
22	539990118	WASHER	4	-
23	539112899	NUT, 5/16-18, NYLOC	8	-
24	596204101	WASHER	2	-
25	539990118	WASHER	2	-
26	539990187	WASHER	4	-
27	539990055	WASHER	4	-
28	539990122	WASHER	2	-
1	585722303	FUEL TANK ASSY	1	-
2	539107593	CONSOLE	1	-
3	539102436	BATTERY	1	-
4	588107201	BRACKET *For 967045501-00, 967844201-00*	1	-
4	593634404	BRACKET *For 967177008-01*	1	-
4	510030001	BRACKET *For 967177007-01*	1	-
5	588030801	CABLE	1	-
6	588030701	CABLE	1	-
7	574841204	PLATE *For 967177007-01, 967045501-00, 967844201-00*	1	-
7	592877402	PLATE *For 967177008-01*	1	-

Ref.	Article N.	Description	Qty	Kit
8	582107602	SWITCH *For 967177007-01, 967177008-01, 967844201-00*	1	-
8	539131627	SWITCH *For 967045501-00*	1	-
9	574455401	SWITCH	1	-
10	581878301	LIGHT *For 967045501-00*	1	-
10	584971801	CHOKE *For 967844201-00*	1	-
10	574206903	CABLE *For 967177007-01, 967177008-01*	1	-
11	539102732	THROTTLE *For 967045501-00, 967844201-00*	1	-
11	539112438	THROTTLE CABLE *For 967177007-01, 967177008-01*	1	-
12	539133049	KNOB	1	-
13	586123901	FUEL HOSE *For 967177007-01, 967045501-00*	1	-
13	586123903	FUEL HOSE *For 967177008-01, 967844201-00*	1	-
14	576469201	FITTING	1	-
15	575018101	CAP	1	-
16	576618101	TANK VENT	1	-
17	539916325	VALVE *For 967844201-00*	1	-
18	576618201	GROMMET	1	-
19	539105245	GROMMET	1	-
20	539103178	NUT CAP	1	-
21	575436501	CLAMP	2	-
22	532123487	HOSE CLAMP *For 967844201-00*	4	-
23	587044810	HOSE *For 967844201-00*	2	-
24	587044539	HOSE *For 967045501-00*	1	-
24	587044536	HOSE *For 967177008-01, CUT TO LENGTH*	1	-
24	587044555	HOSE *For 967844201-00*	1	-
24	587044564	HOSE *For 967177007-01, CUT TO FIT*	1	-
25	574455501	KEY	1	-

Ref.	Article N.	Description	Qty	Kit
26	586161801	HOUR METER	1	-
28	582484201	SCREW	6	-
29	588843202	SUPPORT *For 967177008-01, 967844201-00*	2	-
29	539131671	SUPPORT *For 967177007-01, 967045501-00*	2	-
30	510064001	HOOK	2	-
31	532435395	TERMINAL COVER	1	-
32	539976934	SCREW *For 967177008-01, 967844201-00*	2	-
32	874780512	SCREW *For 967177007-01, 967045501-00*	2	-
33	872140506	BOLT *For 967177007-01, 967045501-00*	2	-
33	539990316	BOLT *For 967177008-01, 967844201-00*	2	-
34	539990411	SCREW *For 967045501-00, 967844201-00*	6	-
34	817490516	SCREW *For 967045501-00, 967844201-00*	3	-
35	539990411	SCREW *For 967045501-00, 967844201-00*	6	-
35	817490516	SCREW *For 967045501-00, 967844201-00*	3	-
36	539976977	NUT	2	-
37	539990997	NUT	2	-
38	539112899	NUT, 5/16-18, NYLOC	13	-
39	819070818	WASHER	4	-
40	819111116	WASHER	2	-
41	539990187	WASHER	2	-
42	532197802	SWITCH *For 967177008-01, 967177007-01*	1	-
42	539113792	SWITCH *For 967045501-00*	1	-
43	532109553	SWITCH *For 967177007-01, 967177008-01, 967045501-00*	2	-
44	581223001	PLATE *For 967177007-01, 967177008-01, 967045501-00*	2	-
45	574822701	SCREW *For 967177007-01, 967177008-01, 967045501-00*	4	-
63	589669901	HARNESS *For 967177007-01, 967844201-00*	1	-

Ref.	Article N.	Description	Qty	Kit
64	532409615	HARNESS *For 967177007-01, 967844201-00*	1	-
65	501279301	HARNESS *For 967045501-00*	1	-
66	900000002	DUMMY PART *For 967177008-01, 589 66 99-02 Harness w/Brake Switch*	1	-
1	581505401	DECK -	1	-
2	539104335	DRIVE BELT -	1	-
3	539113312	BLADE -	3	-
4	539131898	SPINDLE -	3	-
5	539103427	BUSHING -	1	-
6	539112169	BLADE BUSHING -	2	-
7	589766101	PULLEY -	3	-
8	539113300	PULLEY -	3	-
9	539112198	ARM -	1	-
10	539113319	SHIELD -	1	-
11	539113322	SHIELD -	1	-
12	584859402	BRACKET -	2	-
13	584859404	BRACKET -	2	-
14	539130901	CHUTE -	1	-
15	539113317	PLATE -	1	-
16	585323901	BEARING *For 967177008-01, 967045501-00*	3	-
16	532110485	BEARING *For 967177007-01, 967844201-00*	3	-
17	539103256	SPRING -	1	-
18	581606106	BRACKET	1	-

Ref.	Article N.	Description	Qty	Kit
		For 967844201-00		
18	581606102	BRACKET *For 967177007-01, 967177008-01, 967045501-00, ORG*	1	-
19	539130917	BRACKET -	1	-
20	532176066	ROLLER -	1	-
21	532179127	PIN -	1	-
22	539131859	PIN -	2	-
23	532133957	WHEEL -	2	-
24	539976998	NIPPLE -	1	-
25	876020412	SPLIT PIN -	2	-
26	581606102	BRACKET *For 967177007-01, 967177008-01, 967045501-00, ORG*	1	-
26	592964402	BRACKET *For 967177007-01, 967177008-01, 967045501-00*	1	-
27	532187291	SHAFT -	3	-
28	539104763	CLIP *For 967844201-00*	8	-
28	874780648	BOLT *For 967177007-01, 967177008-01, 967045501-00*	2	-
29	539108396	BOLT -	2	-
30	539990563	SCREW -	2	-
31	539976934	SCREW -	8	-
32	539990582	SCREW -	1	-
33	539103433	SCREW *For 967177007-01, 967844201-00*	1	-
33	589343201	MANDREL *For 967177008-01, 967045501-00*	1	-
34	874780520	BOLT -	2	-
35	539990799	BOLT -	3	-

Ref.	Article N.	Description	Qty	Kit
36	872110508	BOLT *For 967177007-01*	2	-
36	539107271	SCREW *For 967177008-01, 967045501-00, 967844201-00*	2	-
37	539100472	SCREW -	2	-
38	539102933	SCREW -	2	-
39	532193003	SCREW -	3	-
40	532137644	SCREW -	2	-
41	584953901	BOLT -	12	-
42	874780648	BOLT *For 967177007-01, 967177008-01, 967045501-00*	2	-
42	532400234	NUT *For 967177007-01, 967177008-01, 967045501-00*	3	-
43	539990717	NUT -	3	-
44	539990196	NUT -	2	-
45	539976979	NUT -	6	-
46	539101331	NUT *For 967177007-01*	1	-
46	873800800	NUT *For 967177008-01, 967045501-00, 967844201-00*	1	-
47	539112899	NUT, 5/16-18, NYLOC -	8	-
48	596134801	HEXAGON NUT -	3	-
49	539106504	WASHER -	2	-
50	819121414	WASHER *For 967844201-00*	10	-
50	539990692	WASHER *For 967177007-01, 967177008-01, 967045501-00*	11	-
51	539109600	WASHER -	8	-
52	539102243	WASHER -	1	-
53	539990550	WASHER	1	-

Ref.	Article N.	Description	Qty	Kit
		For 967177007-01		
53	819182212	WASHER *For 967177008-01, 967045501-00, 967844201-00*	1	-
54	532187690	WASHER -	3	-
55	819141614	WASHER -	3	-
1	510408301	PEDAL -	1	-
2	539110808	CROSS LINK -	2	-
3	586701701	SPACER -	2	-
4	539131861	SPACER. .3 -	1	-
5	586928702	LIFT -	1	-
6	584392702	PLATE -	2	-
7	539131897	BELLCRANK -	1	-
8	539131853	BELLCRANK -	1	-
9	588812102	BRACKET -	1	-
10	588812002	BRACKET -	1	-
11	539131566	LATCH -	1	-
12	539105059	ROPE -	1	-
13	539131791	MOUNT -	1	-
14	532195161	STUD -	4	-
15	539131792	SPRING -	1	-
16	539112896	BOLT -	1	-
17	539102642	SPRING -	1	-
18	539132734	SPRING. TORSION -	1	-

Ref.	Article N.	Description	Qty	Kit
19	539131850	HEIGHT. ADJUST. DECK -	1	-
20	539131860	PIVOT. LATCH. TRANSPORT -	1	-
21	539104808	SUPPORT -	4	-
22	539132182	PIN -	1	-
23	539132851	GRIP -	1	-
24	539115501	COTTER -	4	-
25	532194209	SPRING -	2	-
26	874780648	BOLT -	1	-
27	539990646	BOLT -	1	-
28	874780544	BOLT -	4	-
29	539108181	HCS 1/2-13 X 1-3/4 GR 8 ZD -	2	-
30	539990563	SCREW -	4	-
31	539112899	NUT, 5/16-18, NYLOC -	5	-
32	539976979	NUT -	4	-
33	873800800	NUT -	2	-
34	873900500	NUT -	2	-
35	539200282	NUT -	2	-
36	873900600	NUT -	4	-
37	819141614	WASHER -	1	-
38	539115528	1/2` CONTACT BELLSPR -	1	-
39	539109554	WASHER -	2	-
40	819191912	WASHER	2	-

Ref.	Article N.	Description	Qty	Kit
		-		
41	539991043	BUSHING -	10	-
1	510408301	PEDAL -	1	-
2	539110808	CROSS LINK -	2	-
3	586701701	SPACER -	2	-
4	539131861	SPACER. .3 -	1	-
5	586928702	LIFT -	1	-
6	584392702	PLATE -	2	-
7	539131897	BELLCRANK -	1	-
8	539131853	BELLCRANK -	1	-
9	539112223	STRUT -	2	-
10	539109693	LIFT CHAIN - 3 LINK -	4	-
11	539131566	LATCH -	1	-
12	539105059	ROPE -	1	-
13	539991043	BUSHING *For 967177007-01*	10	-
13	819211616	WASHER *For 967177008-01, 967045501-00*	1	-
14	539132017	MOUNT -	2	-
15	532194209	SPRING *For 967177008-01, 967045501-00*	1	-
16	539112896	BOLT -	1	-
17	539102642	SPRING *For 967177007-01*	1	-
17	539131790	SPRING *For 967177008-01, 967045501-00*	1	-
18	539132734	SPRING. TORSION -	1	-

Ref.	Article N.	Description	Qty	Kit
19	539131850	HEIGHT. ADJUST. DECK -	1	-
20	539131860	PIVOT. LATCH. TRANSPORT -	1	-
21	539104808	SUPPORT -	4	-
22	539132182	PIN -	1	-
24	539132851	GRIP -	1	-
25	539115501	COTTER -	6	-
26	874780544	BOLT *For 967177008-01, 967045501-00*	4	-
26	539101721	SCREW *For 967177007-01*	4	-
27	539108181	HCS 1/2-13 X 1-3/4 GR 8 ZD -	2	-
28	539976941	SCREW -	4	-
29	539101175	SCREW -	4	-
30	874780648	BOLT -	1	-
31	539990646	BOLT -	1	-
32	539108073	BOLT -	4	-
33	539200282	NUT -	2	-
34	539132019	NUT -	8	-
35	539102582	NUT -	8	-
36	539112899	NUT, 5/16-18, NYLOC *For 967177007-01*	5	-
37	539976979	NUT -	4	-
38	539101331	NUT *For 967177007-01*	1	-
38	873800800	NUT *For 967177008-01, 967045501-00*	1	-
39	819141614	WASHER	1	-

Ref.	Article N.	Description	Qty	Kit
		-		
40	539115528	1/2` CONTACT BELLSPR -	2	-
41	539109554	WASHER *For 967177007-01*	2	-
41	819182212	WASHER *For 967177008-01, 967045501-00*	2	-
42	539112899	NUT, 5/16-18, NYLOC *For 967177007-01*	5	-
43	539131791	MOUNT *For 967177007-01*	1	-
44	539131792	SPRING *For 967177007-01*	1	-
1	539132151	ARM -	1	-
2	539105036	GRIP -	1	-
3	575229602	BRACKET -	1	-
4	575229702	BRACKET -	1	-
5	586738802	LEVER -	1	-
6	575230201	SPRING -	2	-
7	575230301	SPRING -	2	-
8	586830002	MOUNT -	1	-
9	539132154	ACTUATOR -	1	-
10	539132153	BELLCRANK -	2	-
11	539132424	LINKAGE. BRAKE -	1	-
12	575229802	BRACKET -	2	-
13	539132161	BLADE BUSHING -	4	-
14	539104763	CLIP -	3	-
15	582121801	CABLE ASSY -	1	-

Ref.	Article N.	Description	Qty	Kit
16	582122001	CABLE ASSY -	2	-
17	505280001	TIE WRAP -	2	-
18	539990643	BOLT -	4	-
19	539108396	BOLT -	1	-
20	539990563	SCREW -	2	-
21	539990209	SCREW -	1	-
22	539110303	BOLT -	2	-
23	539990645	BOLT -	2	-
24	539990316	BOLT -	1	-
25	539131780	BOLT -	1	-
26	874490512	BOLT -	1	-
27	539112899	NUT, 5/16-18, NYLOC -	2	-
28	539990585	NUT -	5	-
29	539990717	NUT -	1	-
30	521996501	NUT -	2	-
31	539115617	NUT -	2	-
32	539200282	NUT -	2	-
33	539976978	NUT -	4	-
34	539107897	NUT -	2	-
35	539990055	WASHER -	8	-
36	539133007	WASHER -	1	-
37	539990122	WASHER	2	-

Ref.	Article N.	Description	Qty	Kit
		-		
38	819182212	WASHER -	1	-
39	532197802	SWITCH -	1	-
1	593564002	ARM -	1	-
2	539105036	GRIP -	1	-
3	593279202	BRACKET -	1	-
4	593279902	BRACKET -	1	-
5	590337701	GEAR -	1	-
6	575230201	SPRING -	2	-
7	575230301	SPRING -	2	-
8	590631502	MOUNT -	1	-
9	590204501	GEAR -	1	-
10	539990196	NUT -	2	-
11	596018303	BRACKET -	6	-
12	539104763	CLIP -	3	-
13	582121801	CABLE ASSY -	1	-
14	582122001	CABLE ASSY -	1	-
15	582121801	CABLE ASSY -	2	-
16	582122001	CABLE ASSY -	1	-
17	596018303	BRACKET -	1	-
18	593239802	ACTUATOR -	1	-
19	539990643	BOLT -	4	-

Ref.	Article N.	Description	Qty	Kit
20	539108396	BOLT -	1	-
21	525544001	BOLT -	3	-
22	539110303	BOLT -	2	-
23	539990645	BOLT -	2	-
24	539990316	BOLT -	1	-
25	539131780	BOLT -	1	-
26	874490512	BOLT -	1	-
27	525544001	BOLT -	1	-
28	539112899	NUT, 5/16-18, NYLOC -	1	-
29	539990585	NUT -	2	-
30	539990717	NUT -	1	-
31	521996501	NUT -	2	-
32	539115617	NUT -	2	-
33	539200282	NUT -	3	-
34	539976978	NUT -	4	-
35	539107897	NUT -	2	-
36	539990196	NUT -	2	-
37	539990055	WASHER -	8	-
38	819182212	WASHER -	1	-
39	539990122	WASHER -	2	-
40	819182212	WASHER -	1	-
41	595846701	BRAKE ASSY	1	-

Ref.	Article N.	Description	Qty	Kit
		NOT SHOWN		
1	501580402	SEAT -	1	-
2	539130359	BELT -	1	-
3	539103247	WIRE -	1	-
4	501762102	SUPPORT -	1	-
5	584916802	MOUNT -	2	-
6	587613301	SPRING -	2	-
7	539104763	CLIP -	8	-
8	539130793	STOP -	1	-
9	539119741	SWITCH -	1	-
10	584809102	SUPPORT -	1	-
11	584990102	SUPPORT -	1	-
12	584990202	SUPPORT -	1	-
13	539105974	GROMMET -	1	-
14	874490512	BOLT -	2	-
15	525544001	BOLT -	4	-
16	874490560	BOLT -	2	-
17	539990645	BOLT -	3	-
18	539115620	1/4-20X3/4 CARR BLT -	1	-
19	539130896	BOLT -	2	-
20	539112034	BOLT *For 967844201-00*	2	-
20	539124775	SCREW *For 967177007-01, 967177008-01, 967045501-00*	2	-

Ref.	Article N.	Description	Qty	Kit
21	872050506	BOLT *For 967844201-00*	2	-
22	539112899	NUT, 5/16-18, NYLOC -	9	-
23	539976979	NUT -	2	-
24	539990394	NUT -	2	-
25	539976978	NUT -	1	-
26	819141614	WASHER *For 967177007-01, 967177008-01, 967045501-00*	4	-
26	819091216	WASHER *For 967177007-01, 967177008-01, 967045501-00*	1	-
27	819141614	WASHER *For 967177007-01, 967177008-01, 967045501-00*	4	-
27	819091216	WASHER *For 967177007-01, 967177008-01, 967045501-00*	1	-
28	521996501	NUT *For 967177007-01, 967177008-01, 967045501-00*	1	-
29	873800500	LOCK NUT *For 967177007-01, 967177008-01, 967045501-00*	1	-
1	590090803	TUBE	1	-
2	590090804	TUBE	1	-
3	532109553	SWITCH	2	-
4	585124705	BRACKET	2	-
5	539438282	BEARING *For 967177007-01, 967177008-01, 967045501-00*	4	-
5	532438282	BEARING UNIT *For 967844201-00*	4	-
6	587187701	CONTROL	2	-
7	577420001	LEVER	2	-
8	584927201	SPACER	2	-
9	539102720	GAS SPRING	2	-
10	581437501	BLOCK	2	-
11	539102845	SPRING	2	-
12	576850301	SPRING	1	-
13	539131799	KNOB	1	-
14	574811401	ROD	2	-
15	539116689	ROD END COUPLER	2	-
16	588692502	ROD	2	-

Ref.	Article N.	Description	Qty	Kit
17	579764601	JOINT	2	-
18	581223001	PLATE *For 967844201-00*	2	-
19	576850402	SCREW *For 967177007-01, 967177008-01, 967045501-00*	2	-
19	539990585	NUT *For 967177007-01, 967177008-01, 967045501-00*	4	-
20	574822701	SCREW *For 967844201-00*	4	-
21	874780844	BOLT *For 967177007-01, 967177008-01, 967045501-00*	2	-
21	596580801	BOLT *NOTE: If you order 596580801 you will need to also order key 30 532423063 in the same quantity.*	1	-
22	874780844	BOLT *For 967177007-01, 967177008-01, 967045501-00*	2	-
22	539976935	SCREW *For 967177007-01, 967177008-01, 967045501-00*	4	-
23	539976935	SCREW *For 967177007-01, 967177008-01, 967045501-00*	4	-
23	525544001	BOLT *For 967177007-01, 967177008-01, 967045501-00*	4	-
24	525544001	BOLT *For 967177007-01, 967177008-01, 967045501-00*	4	-
24	874490512	BOLT *For 967177007-01, 967177008-01, 967045501-00*	8	-
25	576850402	SCREW *For 967177007-01, 967177008-01, 967045501-00*	2	-
25	874490512	BOLT *For 967177007-01, 967177008-01, 967045501-00*	8	-
26	539991073	NUT	2	-
27	539990585	NUT *For 967177007-01, 967177008-01, 967045501-00*	4	-
28	539990717	NUT *For 967177007-01, 967177008-01, 967045501-00*	6	-
28	539108010	NUT *For 967177007-01, 967177008-01, 967045501-00*	2	-
29	539990717	NUT *For 967177007-01, 967177008-01, 967045501-00*	4	-
29	539112899	NUT, 5/16-18, NYLOC *For 967177007-01, 967177008-01, 967045501-00*	10	-
30	819111116	WASHER *For 967177007-01, 967177008-01, 967045501-00*	12	-

Ref.	Article N.	Description	Qty	Kit
30	532423063	WASHER *NOTE: If you order 532423063 you will need to also order key 30 596580801 in the same quantity.*	1	-
31	539990223	NUT	4	-
32	819111116	WASHER *For 967177007-01, 967177008-01, 967045501-00*	14	-
33	539130894	GRIP *For 967177007-01, 967177008-01, 967045501-00*	2	-
34	874780520	BOLT *For 967177007-01, 967177008-01, 967045501-00*	5	-
35	539108010	NUT *For 967177007-01, 967177008-01, 967045501-00*	2	-
36	595305701	SCREW	2	-
1	586955401	WHEEL ASSY -	2	-
2	581199501	WHEEL ASSY -	2	-
3	582746401	TIRE -	2	-
3	539102543	BEARING -	4	-
4	539102535	CAP -	2	-
5	586921902	FORK -	2	-
6	539102851	SEALING -	2	-
7	575334901	SPACER -	2	-
8	539101474	NIPPLE -	2	-
9	539102889	SPLIT PIN -	2	-
10	539105517	BOLT -	2	-
11	539102852	NUT -	2	-
12	521991101	NUT -	2	-
13	587653902	NUT -	8	-
14	819182212	WASHER -	2	-

PARKING BRAKE

For 967045501-00

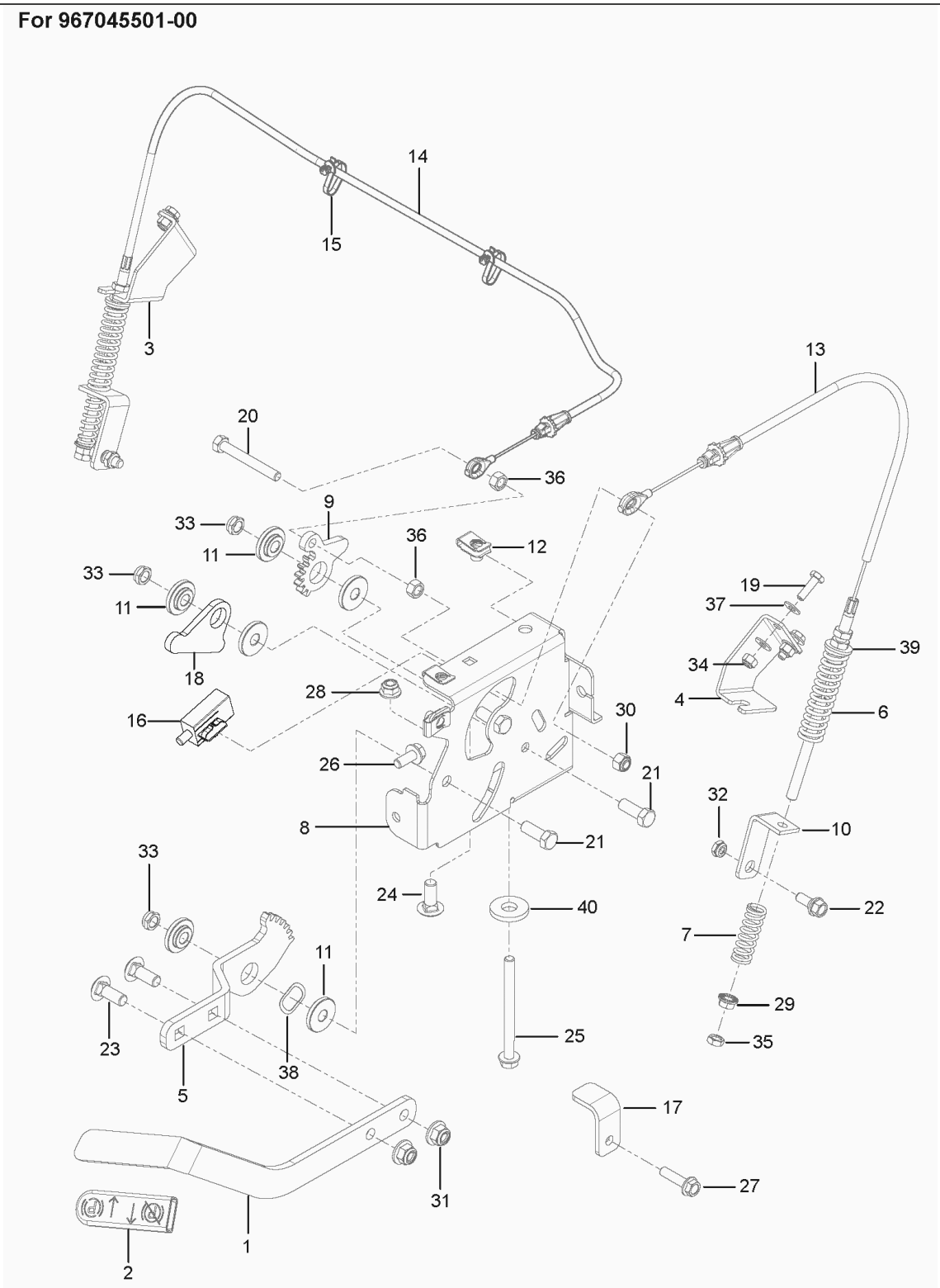

Ref.	Article N.	Description	Qty	Kit
1	586651402	PLATE -	1	-
2	574811001	PULLEY	1	-

Ref.	Article N.	Description	Qty	Kit
		-		
3	582042801	SOLENOID -	1	-
4	539101363	CLAMP -	1	-
5	584825501	HOSE ASSY -	1	-
6	575229902	BRACKET -	1	-
7	539102757	CABLE -	1	-
8	574607001	CLUTCH -	1	-
9	575017301	STOP -	1	-
10	539131604	MUFFLER ASSY -	1	-
11	583954501	TUBE -	1	-
12	583954801	TUBE -	1	-
13	586839701	GASKET -	2	-
14	532131563	COVER -	2	-
15	539102759	INSULATOR -	1	-
16	539912757	KEY -	1	-
17	539990071	BOLT -	1	-
18	817120616	SCREW -	4	-
19	539107271	SCREW -	2	-
20	874490512	BOLT -	8	-
21	581332802	BOLT -	1	-
22	539990302	HWST 1/4C X 3/8 -	1	-
23	539107475	BOLT -	2	-

Ref.	Article N.	Description	Qty	Kit
24	539108120	NUT -	4	-
25	539112899	NUT, 5/16-18, NYLOC -	10	-
26	539990053	WASHER -	1	-
27	539990247	WASHER -	1	-
1	586651402	PLATE	1	-
2	574846402	PLATE *For 967177008-01*	1	-
2	586670402	PLATE *For 967177007-01, 967045501-00*	1	-
3	574811001	PULLEY	1	-
4	539976688	PULLEY	1	-
5	532175820	PULLEY	1	-
6	574870901	DRIVE BELT	1	-
7	525435601	PIVOT	1	-
8	510206301	PIVOT	1	-
9	510041603	ARM	1	-
10	574607001	CLUTCH	1	-
11	575017302	STOP	1	-
12	539102757	CABLE *For 967177007-01, 967177008-01*	1	-
13	576701801	MUFFLER *For 967177007-01*	1	-
13	525750201	MUFFLER *For 967177008-01*	1	-
13	501451201	MUFFLER ASSY *For 967045501-00*	1	-
14	582042801	SOLENOID *For 967177007-01, 967177008-01*	1	-
15	510254401	SPRING	1	-
16	539114662	SHIELD, DUST	1	-
17	510254501	SHIELD	2	-
18	579150901	SHIELD *For 967177007-01, 967177008-01*	1	-
19	584825501	HOSE ASSY *For 967177008-01, 967045501-00*	1	-
20	522599001	ADAPTER *For 967177008-01*	1	-

Ref.	Article N.	Description	Qty	Kit
21	539101363	CLAMP *For 967177008-01, 967045501-00*	1	-
22	522837001	PLUG *For 967177008-01*	1	-
22	585807101	PLUG *For 967045501-00*	1	-
23	539912757	KEY	1	-
24	586839701	GASKET *For 967177007-01, 967177008-01*	2	-
25	532131563	COVER *For 967177007-01*	1	-
25	539102759	INSULATOR *For 967177008-01*	2	-
26	532131563	COVER *For 967177007-01*	2	-
27	539104763	CLIP	4	-
28	539100413	BOLT *For 967177007-01*	1	-
28	872140610	BOLT *For 967177008-01, 967045501-00*	1	-
29	872140622	BOLT *For 967045501-00*	1	-
29	539130235	RHSNB 3/8-16 X 2.75 GR5 ZD *For 967177007-01, 967177008-01*	1	-
30	872110508	BOLT *For 967177008-01*	2	-
31	581332802	BOLT	1	-
32	539103433	SCREW *For 967177007-01*	1	-
32	874780852	BOLT *For 967177008-01, 967045501-00*	1	-
33	525866201	BOLT *For 967177007-01*	1	-
33	874490632	SCREW *For 967177008-01, 967045501-00*	1	-
34	874490512	BOLT	11	-
35	874780408	BOLT *For 967045501-00*	1	-
35	539990071	BOLT *For 967177008-01*	1	-
36	817120616	SCREW *For 967177007-01, 967045501-00*	4	-

Ref.	Article N.	Description	Qty	Kit
36	539990563	SCREW *For 967177008-01*	4	-
37	592858702	BOLT	8	-
38	817490406	SCREW *For 967177008-01*	1	-
38	539990302	HWST 1/4C X 3/8 *For 967177007-01*	1	-
39	539990613	NUT *For 967177007-01*	1	-
40	539112899	NUT, 5/16-18, NYLOC	15	-
41	521991101	NUT	1	-
42	539200282	NUT	4	-
43	521996501	NUT *For 967177008-01, 967045501-00*	2	-
44	539108120	NUT *For 967177007-01, 967177008-01*	4	-
45	539990053	WASHER	1	-
46	539115528	1/2` CONTACT BELLSPR	1	-
47	539990247	WASHER	1	-
48	539109562	WASHER	1	-
50	539109554	WASHER *For 967177007-01*	2	-
50	819182212	WASHER *For 967177008-01, 967045501-00*	2	-
51	539111897	WASHER	1	-
52	819141614	WASHER	1	-
53	539990118	WASHER *For 967177008-01, 967045501-00*	4	-
54	539990613	NUT *For 967177007-01*	1	-
54	521996501	NUT *For 967177008-01, 967045501-00*	2	-
55	532183906	SCREW *For 967177007-01*	4	-
55	532192334	SCREW *For 967045501-00*	4	-
91	501279301	HARNESS *For 967045501-00*	1	-
92	586839901	GASKET *For 967045501-00, NOT SHOWN*	2	-
93	587450101	HARNESS *For 967045501-00*	1	-

Ref.	Article N.	Description	Qty	Kit
94	574825801	KIT *For 967045501-00, SPARK ARRESTOR*	1	-
1	501656001	FRAME -	1	-
2	586893002	GUARD -	1	-
3	586867702	SUPPORT -	1	-
4	586560101	BRACKET -	1	-
5	586560201	BRACKET -	1	-
6	539132744	PLATE -	1	-
7	539132380	PLATE -	1	-
8	594037402	BRACKET *For all EXCEPT 967844201-00, BLK*	1	-
8	587048702	BRACKET *For 967844201-00*	1	-
9	575245202	BRACKET -	2	-
10	575533602	MOUNT -	2	-
11	900000002	DUMMY PART *For all EXCEPT 967844201-00, 593 79 55-05 Guard, Skid Gray*	1	-
11	575230402	SHIELD *For 967844201-00*	1	-
12	539132859	HEAT SHIELD -	1	-
13	587990501	CAP -	2	-
14	593634302	STOP *For all EXCEPT 967844201-00*	2	-
14	505256401	STOP *For 967844201-00*	2	-
15	539102587	ABSORBER -	7	-
16	539105974	GROMMET -	1	-
17	522801401	BUMPER *For 967844201-00*	2	-
17	874490644	BOLT	2	-

Ref.	Article N.	Description	Qty	Kit
		For 967844201-00		
18	539104411	KNOB -	1	-
19	539200715	PIN *For 967844201-00*	2	-
19	874490512	BOLT *For 967844201-00*	1	-
20	539133006	BOLT *For 967844201-00*	2	-
20	574388001	PIN *For 967844201-00*	2	-
21	539104763	CLIP *For 967844201-00*	5	-
22	539133006	BOLT *For 967844201-00*	2	-
22	525544001	BOLT *For 967844201-00*	1	-
23	874490644	BOLT *For 967844201-00*	2	-
23	539102335	BOLT *For 967844201-00*	2	-
24	874490512	BOLT *For 967844201-00*	18	-
24	539109117	BOLT *For all EXCEPT 967844201-00*	2	-
25	872140508	BOLT *For all EXCEPT 967844201-00*	3	-
25	874490560	BOLT *For 967844201-00*	4	-
26	525544001	BOLT *For 967844201-00*	1	-
26	872110606	BOLT *For all EXCEPT 967844201-00*	6	-
27	539102335	BOLT *For 967844201-00*	2	-
27	539200282	NUT *For 967844201-00*	6	-
28	874490560	BOLT *For 967844201-00*	4	-
28	580754601	BOLT *For 967844201-00*	6	-
29	872140506	BOLT *For 967844201-00*	6	-

Ref.	Article N.	Description	Qty	Kit
29	521996501	NUT *For all EXCEPT 967844201-00*	2	-
30	539990208	SCREW *For 967844201-00*	3	-
30	539112899	NUT, 5/16-18, NYLOC *For all EXCEPT 967844201-00*	12	-
31	539990645	BOLT -	2	-
32	539990316	BOLT *For 967844201-00*	4	-
32	819111116	WASHER *For all EXCEPT 967844201-00*	2	-
33	539200282	NUT *For 967844201-00*	6	-
33	539990250	WASHER *For all EXCEPT 967844201-00*	1	-
34	521996501	NUT *For all EXCEPT 967844201-00*	2	-
35	539112899	NUT, 5/16-18, NYLOC *For all EXCEPT 967844201-00*	13	-
36	525829101	NUT -	6	-
37	539976978	NUT *For 967844201-00*	2	-
37	873800400	NUT *For all EXCEPT 967844201-00*	4	-
38	819111116	WASHER *For all EXCEPT 967844201-00*	2	-
39	539990250	WASHER *For all EXCEPT 967844201-00*	1	-
40	819132416	WASHER -	2	-
41	539102653	WASHER *For 967844201-00*	4	-
42	539104763	CLIP *For 967844201-00*	8	-
43	539102653	WASHER *For 967844201-00*	4	-
62	575274801	KIT *For 967844201-00, NOT SHOWN PROTECTION FRAME*	1	-
1	586670402	PLATE	1	-
2	539976688	PULLEY	1	-
3	532175820	PULLEY	1	-

Ref.	Article N.	Description	Qty	Kit
4	510041603	ARM	1	-
5	574870901	DRIVE BELT	1	-
6	584994202	SHIELD	2	-
7	539102587	ABSORBER	2	-
8	510206301	PIVOT	1	-
9	525435601	PIVOT	1	-
10	539104763	CLIP	4	-
11	510254501	SHIELD	2	-
12	539114662	SHIELD, DUST	1	-
13	510254401	SPRING	1	-
14	872140610	BOLT	1	-
15	539130235	RHSNB 3/8-16 X 2.75 GR5 ZD	1	-
16	874490632	SCREW	1	-
17	874490512	BOLT	3	-
18	592858702	BOLT	9	-
19	874780852	BOLT	1	-
20	521991101	NUT	1	-
21	521996501	NUT	2	-
22	539112899	NUT, 5/16-18, NYLOC	5	-
23	539200282	NUT	4	-
24	539990613	NUT	1	-
25	539115528	1/2` CONTACT BELLSPR	1	-
26	819182212	WASHER	2	-
27	819141614	WASHER	1	-
28	539109562	WASHER	1	-
31	539111897	WASHER	1	-
1	574569101	TRANSMISSION *LEFT*	1	-
2	574569102	TRANSMISSION *RIGHT*	1	-
3	593278902	BRACKET *For 967177008-01, 967045501-00, 967844201-00*	1	-
3	575017102	BRACKET *For 967177007-01*	1	-
4	593279002	BRACKET *For 967177008-01, 967045501-00, 967844201-00*	1	-
4	575017002	BRACKET *For 967177007-01*	1	-
5	539131616	LINKAGE. LEFT BYPASS	1	-
6	539131618	LINKAGE	1	-

Ref.	Article N.	Description	Qty	Kit
7	574892101	HOSE ASSY	2	-
8	586067501	HOSE	1	-
9	585318201	TANK	1	-
10	584994202	SHIELD	2	-
11	539113466	OIL FILTER	2	-
12	530095646	FUEL FILTER	1	-
13	586072701	CAP	1	-
14	539976988	PIN	2	-
15	539102587	ABSORBER	2	-
16	539976988	PIN	2	-
17	539990643	BOLT	1	-
18	592858702	BOLT	9	-
19	539101721	SCREW *For 967177007-01*	4	-
19	539976978	NUT *For 967177008-01, 967045501-00, 967844201-00*	4	-
20	539112899	NUT, 5/16-18, NYLOC	2	-
21	574233801	SCREW	4	-
22	539990118	WASHER	4	-
23	539112899	NUT, 5/16-18, NYLOC	8	-
24	596204101	WASHER	2	-
25	539990118	WASHER	2	-
26	539990187	WASHER	4	-
27	539990055	WASHER	4	-
28	539990122	WASHER	2	-
1	585722303	FUEL TANK ASSY	1	-
2	539107593	CONSOLE	1	-
3	539102436	BATTERY	1	-
4	588107201	BRACKET *For 967045501-00, 967844201-00*	1	-
4	593634404	BRACKET *For 967177008-01*	1	-
4	510030001	BRACKET *For 967177007-01*	1	-
5	588030801	CABLE	1	-
6	588030701	CABLE	1	-
7	574841204	PLATE *For 967177007-01, 967045501-00, 967844201-00*	1	-
7	592877402	PLATE *For 967177008-01*	1	-

Ref.	Article N.	Description	Qty	Kit
8	582107602	SWITCH *For 967177007-01, 967177008-01, 967844201-00*	1	-
8	539131627	SWITCH *For 967045501-00*	1	-
9	574455401	SWITCH	1	-
10	581878301	LIGHT *For 967045501-00*	1	-
10	584971801	CHOKE *For 967844201-00*	1	-
10	574206903	CABLE *For 967177007-01, 967177008-01*	1	-
11	539102732	THROTTLE *For 967045501-00, 967844201-00*	1	-
11	539112438	THROTTLE CABLE *For 967177007-01, 967177008-01*	1	-
12	539133049	KNOB	1	-
13	586123901	FUEL HOSE *For 967177007-01, 967045501-00*	1	-
13	586123903	FUEL HOSE *For 967177008-01, 967844201-00*	1	-
14	576469201	FITTING	1	-
15	575018101	CAP	1	-
16	576618101	TANK VENT	1	-
17	539916325	VALVE *For 967844201-00*	1	-
18	576618201	GROMMET	1	-
19	539105245	GROMMET	1	-
20	539103178	NUT CAP	1	-
21	575436501	CLAMP	2	-
22	532123487	HOSE CLAMP *For 967844201-00*	4	-
23	587044810	HOSE *For 967844201-00*	2	-
24	587044539	HOSE *For 967045501-00*	1	-
24	587044536	HOSE *For 967177008-01, CUT TO LENGTH*	1	-
24	587044555	HOSE *For 967844201-00*	1	-
24	587044564	HOSE *For 967177007-01, CUT TO FIT*	1	-
25	574455501	KEY	1	-

Ref.	Article N.	Description	Qty	Kit
26	586161801	HOUR METER	1	-
28	582484201	SCREW	6	-
29	588843202	SUPPORT *For 967177008-01, 967844201-00*	2	-
29	539131671	SUPPORT *For 967177007-01, 967045501-00*	2	-
30	510064001	HOOK	2	-
31	532435395	TERMINAL COVER	1	-
32	539976934	SCREW *For 967177008-01, 967844201-00*	2	-
32	874780512	SCREW *For 967177007-01, 967045501-00*	2	-
33	872140506	BOLT *For 967177007-01, 967045501-00*	2	-
33	539990316	BOLT *For 967177008-01, 967844201-00*	2	-
34	539990411	SCREW *For 967045501-00, 967844201-00*	6	-
34	817490516	SCREW *For 967045501-00, 967844201-00*	3	-
35	539990411	SCREW *For 967045501-00, 967844201-00*	6	-
35	817490516	SCREW *For 967045501-00, 967844201-00*	3	-
36	539976977	NUT	2	-
37	539990997	NUT	2	-
38	539112899	NUT, 5/16-18, NYLOC	13	-
39	819070818	WASHER	4	-
40	819111116	WASHER	2	-
41	539990187	WASHER	2	-
42	532197802	SWITCH *For 967177008-01, 967177007-01*	1	-
42	539113792	SWITCH *For 967045501-00*	1	-
43	532109553	SWITCH *For 967177007-01, 967177008-01, 967045501-00*	2	-
44	581223001	PLATE *For 967177007-01, 967177008-01, 967045501-00*	2	-
45	574822701	SCREW *For 967177007-01, 967177008-01, 967045501-00*	4	-
63	589669901	HARNESS *For 967177007-01, 967844201-00*	1	-

Ref.	Article N.	Description	Qty	Kit
64	532409615	HARNESS *For 967177007-01, 967844201-00*	1	-
65	501279301	HARNESS *For 967045501-00*	1	-
66	900000002	DUMMY PART *For 967177008-01, 589 66 99-02 Harness w/Brake Switch*	1	-
1	581505401	DECK -	1	-
2	539104335	DRIVE BELT -	1	-
3	539113312	BLADE -	3	-
4	539131898	SPINDLE -	3	-
5	539103427	BUSHING -	1	-
6	539112169	BLADE BUSHING -	2	-
7	589766101	PULLEY -	3	-
8	539113300	PULLEY -	3	-
9	539112198	ARM -	1	-
10	539113319	SHIELD -	1	-
11	539113322	SHIELD -	1	-
12	584859402	BRACKET -	2	-
13	584859404	BRACKET -	2	-
14	539130901	CHUTE -	1	-
15	539113317	PLATE -	1	-
16	585323901	BEARING *For 967177008-01, 967045501-00*	3	-
16	532110485	BEARING *For 967177007-01, 967844201-00*	3	-
17	539103256	SPRING -	1	-
18	581606106	BRACKET	1	-

Ref.	Article N.	Description	Qty	Kit
		For 967844201-00		
18	581606102	BRACKET *For 967177007-01, 967177008-01, 967045501-00, ORG*	1	-
19	539130917	BRACKET -	1	-
20	532176066	ROLLER -	1	-
21	532179127	PIN -	1	-
22	539131859	PIN -	2	-
23	532133957	WHEEL -	2	-
24	539976998	NIPPLE -	1	-
25	876020412	SPLIT PIN -	2	-
26	581606102	BRACKET *For 967177007-01, 967177008-01, 967045501-00, ORG*	1	-
26	592964402	BRACKET *For 967177007-01, 967177008-01, 967045501-00*	1	-
27	532187291	SHAFT -	3	-
28	539104763	CLIP *For 967844201-00*	8	-
28	874780648	BOLT *For 967177007-01, 967177008-01, 967045501-00*	2	-
29	539108396	BOLT -	2	-
30	539990563	SCREW -	2	-
31	539976934	SCREW -	8	-
32	539990582	SCREW -	1	-
33	539103433	SCREW *For 967177007-01, 967844201-00*	1	-
33	589343201	MANDREL *For 967177008-01, 967045501-00*	1	-
34	874780520	BOLT -	2	-
35	539990799	BOLT -	3	-

Ref.	Article N.	Description	Qty	Kit
36	872110508	BOLT *For 967177007-01*	2	-
36	539107271	SCREW *For 967177008-01, 967045501-00, 967844201-00*	2	-
37	539100472	SCREW -	2	-
38	539102933	SCREW -	2	-
39	532193003	SCREW -	3	-
40	532137644	SCREW -	2	-
41	584953901	BOLT -	12	-
42	874780648	BOLT *For 967177007-01, 967177008-01, 967045501-00*	2	-
42	532400234	NUT *For 967177007-01, 967177008-01, 967045501-00*	3	-
43	539990717	NUT -	3	-
44	539990196	NUT -	2	-
45	539976979	NUT -	6	-
46	539101331	NUT *For 967177007-01*	1	-
46	873800800	NUT *For 967177008-01, 967045501-00, 967844201-00*	1	-
47	539112899	NUT, 5/16-18, NYLOC -	8	-
48	596134801	HEXAGON NUT -	3	-
49	539106504	WASHER -	2	-
50	819121414	WASHER *For 967844201-00*	10	-
50	539990692	WASHER *For 967177007-01, 967177008-01, 967045501-00*	11	-
51	539109600	WASHER -	8	-
52	539102243	WASHER -	1	-
53	539990550	WASHER	1	-

Ref.	Article N.	Description	Qty	Kit
		For 967177007-01		
53	819182212	WASHER *For 967177008-01, 967045501-00, 967844201-00*	1	-
54	532187690	WASHER -	3	-
55	819141614	WASHER -	3	-
1	510408301	PEDAL -	1	-
2	539110808	CROSS LINK -	2	-
3	586701701	SPACER -	2	-
4	539131861	SPACER. .3 -	1	-
5	586928702	LIFT -	1	-
6	584392702	PLATE -	2	-
7	539131897	BELLCRANK -	1	-
8	539131853	BELLCRANK -	1	-
9	588812102	BRACKET -	1	-
10	588812002	BRACKET -	1	-
11	539131566	LATCH -	1	-
12	539105059	ROPE -	1	-
13	539131791	MOUNT -	1	-
14	532195161	STUD -	4	-
15	539131792	SPRING -	1	-
16	539112896	BOLT -	1	-
17	539102642	SPRING -	1	-
18	539132734	SPRING. TORSION -	1	-

Ref.	Article N.	Description	Qty	Kit
19	539131850	HEIGHT. ADJUST. DECK -	1	-
20	539131860	PIVOT. LATCH. TRANSPORT -	1	-
21	539104808	SUPPORT -	4	-
22	539132182	PIN -	1	-
23	539132851	GRIP -	1	-
24	539115501	COTTER -	4	-
25	532194209	SPRING -	2	-
26	874780648	BOLT -	1	-
27	539990646	BOLT -	1	-
28	874780544	BOLT -	4	-
29	539108181	HCS 1/2-13 X 1-3/4 GR 8 ZD -	2	-
30	539990563	SCREW -	4	-
31	539112899	NUT, 5/16-18, NYLOC -	5	-
32	539976979	NUT -	4	-
33	873800800	NUT -	2	-
34	873900500	NUT -	2	-
35	539200282	NUT -	2	-
36	873900600	NUT -	4	-
37	819141614	WASHER -	1	-
38	539115528	1/2` CONTACT BELLSPR -	1	-
39	539109554	WASHER -	2	-
40	819191912	WASHER	2	-

Ref.	Article N.	Description	Qty	Kit
		-		
41	539991043	BUSHING -	10	-
1	510408301	PEDAL -	1	-
2	539110808	CROSS LINK -	2	-
3	586701701	SPACER -	2	-
4	539131861	SPACER. .3 -	1	-
5	586928702	LIFT -	1	-
6	584392702	PLATE -	2	-
7	539131897	BELLCRANK -	1	-
8	539131853	BELLCRANK -	1	-
9	539112223	STRUT -	2	-
10	539109693	LIFT CHAIN - 3 LINK -	4	-
11	539131566	LATCH -	1	-
12	539105059	ROPE -	1	-
13	539991043	BUSHING *For 967177007-01*	10	-
13	819211616	WASHER *For 967177008-01, 967045501-00*	1	-
14	539132017	MOUNT -	2	-
15	532194209	SPRING *For 967177008-01, 967045501-00*	1	-
16	539112896	BOLT -	1	-
17	539102642	SPRING *For 967177007-01*	1	-
17	539131790	SPRING *For 967177008-01, 967045501-00*	1	-
18	539132734	SPRING. TORSION -	1	-

Ref.	Article N.	Description	Qty	Kit
19	539131850	HEIGHT. ADJUST. DECK -	1	-
20	539131860	PIVOT. LATCH. TRANSPORT -	1	-
21	539104808	SUPPORT -	4	-
22	539132182	PIN -	1	-
24	539132851	GRIP -	1	-
25	539115501	COTTER -	6	-
26	874780544	BOLT *For 967177008-01, 967045501-00*	4	-
26	539101721	SCREW *For 967177007-01*	4	-
27	539108181	HCS 1/2-13 X 1-3/4 GR 8 ZD -	2	-
28	539976941	SCREW -	4	-
29	539101175	SCREW -	4	-
30	874780648	BOLT -	1	-
31	539990646	BOLT -	1	-
32	539108073	BOLT -	4	-
33	539200282	NUT -	2	-
34	539132019	NUT -	8	-
35	539102582	NUT -	8	-
36	539112899	NUT, 5/16-18, NYLOC *For 967177007-01*	5	-
37	539976979	NUT -	4	-
38	539101331	NUT *For 967177007-01*	1	-
38	873800800	NUT *For 967177008-01, 967045501-00*	1	-
39	819141614	WASHER	1	-

Ref.	Article N.	Description	Qty	Kit
		-		
40	539115528	1/2` CONTACT BELLSPR -	2	-
41	539109554	WASHER *For 967177007-01*	2	-
41	819182212	WASHER *For 967177008-01, 967045501-00*	2	-
42	539112899	NUT, 5/16-18, NYLOC *For 967177007-01*	5	-
43	539131791	MOUNT *For 967177007-01*	1	-
44	539131792	SPRING *For 967177007-01*	1	-
1	539132151	ARM -	1	-
2	539105036	GRIP -	1	-
3	575229602	BRACKET -	1	-
4	575229702	BRACKET -	1	-
5	586738802	LEVER -	1	-
6	575230201	SPRING -	2	-
7	575230301	SPRING -	2	-
8	586830002	MOUNT -	1	-
9	539132154	ACTUATOR -	1	-
10	539132153	BELLCRANK -	2	-
11	539132424	LINKAGE. BRAKE -	1	-
12	575229802	BRACKET -	2	-
13	539132161	BLADE BUSHING -	4	-
14	539104763	CLIP -	3	-
15	582121801	CABLE ASSY -	1	-

Ref.	Article N.	Description	Qty	Kit
16	582122001	CABLE ASSY -	2	-
17	505280001	TIE WRAP -	2	-
18	539990643	BOLT -	4	-
19	539108396	BOLT -	1	-
20	539990563	SCREW -	2	-
21	539990209	SCREW -	1	-
22	539110303	BOLT -	2	-
23	539990645	BOLT -	2	-
24	539990316	BOLT -	1	-
25	539131780	BOLT -	1	-
26	874490512	BOLT -	1	-
27	539112899	NUT, 5/16-18, NYLOC -	2	-
28	539990585	NUT -	5	-
29	539990717	NUT -	1	-
30	521996501	NUT -	2	-
31	539115617	NUT -	2	-
32	539200282	NUT -	2	-
33	539976978	NUT -	4	-
34	539107897	NUT -	2	-
35	539990055	WASHER -	8	-
36	539133007	WASHER -	1	-
37	539990122	WASHER	2	-

Ref.	Article N.	Description	Qty	Kit
		-		
38	819182212	WASHER -	1	-
39	532197802	SWITCH -	1	-
1	593564002	ARM -	1	-
2	539105036	GRIP -	1	-
3	593279202	BRACKET -	1	-
4	593279902	BRACKET -	1	-
5	590337701	GEAR -	1	-
6	575230201	SPRING -	2	-
7	575230301	SPRING -	2	-
8	590631502	MOUNT -	1	-
9	590204501	GEAR -	1	-
10	539990196	NUT -	2	-
11	596018303	BRACKET -	6	-
12	539104763	CLIP -	3	-
13	582121801	CABLE ASSY -	1	-
14	582122001	CABLE ASSY -	1	-
15	582121801	CABLE ASSY -	2	-
16	582122001	CABLE ASSY -	1	-
17	596018303	BRACKET -	1	-
18	593239802	ACTUATOR -	1	-
19	539990643	BOLT -	4	-

Ref.	Article N.	Description	Qty	Kit
20	539108396	BOLT -	1	-
21	525544001	BOLT -	3	-
22	539110303	BOLT -	2	-
23	539990645	BOLT -	2	-
24	539990316	BOLT -	1	-
25	539131780	BOLT -	1	-
26	874490512	BOLT -	1	-
27	525544001	BOLT -	1	-
28	539112899	NUT, 5/16-18, NYLOC -	1	-
29	539990585	NUT -	2	-
30	539990717	NUT -	1	-
31	521996501	NUT -	2	-
32	539115617	NUT -	2	-
33	539200282	NUT -	3	-
34	539976978	NUT -	4	-
35	539107897	NUT -	2	-
36	539990196	NUT -	2	-
37	539990055	WASHER -	8	-
38	819182212	WASHER -	1	-
39	539990122	WASHER -	2	-
40	819182212	WASHER -	1	-
41	595846701	BRAKE ASSY	1	-

Ref.	Article N.	Description	Qty	Kit
		NOT SHOWN		
1	501580402	SEAT -	1	-
2	539130359	BELT -	1	-
3	539103247	WIRE -	1	-
4	501762102	SUPPORT -	1	-
5	584916802	MOUNT -	2	-
6	587613301	SPRING -	2	-
7	539104763	CLIP -	8	-
8	539130793	STOP -	1	-
9	539119741	SWITCH -	1	-
10	584809102	SUPPORT -	1	-
11	584990102	SUPPORT -	1	-
12	584990202	SUPPORT -	1	-
13	539105974	GROMMET -	1	-
14	874490512	BOLT -	2	-
15	525544001	BOLT -	4	-
16	874490560	BOLT -	2	-
17	539990645	BOLT -	3	-
18	539115620	1/4-20X3/4 CARR BLT -	1	-
19	539130896	BOLT -	2	-
20	539112034	BOLT *For 967844201-00*	2	-
20	539124775	SCREW *For 967177007-01, 967177008-01, 967045501-00*	2	-

Ref.	Article N.	Description	Qty	Kit
21	872050506	BOLT *For 967844201-00*	2	-
22	539112899	NUT, 5/16-18, NYLOC -	9	-
23	539976979	NUT -	2	-
24	539990394	NUT -	2	-
25	539976978	NUT -	1	-
26	819141614	WASHER *For 967177007-01, 967177008-01, 967045501-00*	4	-
26	819091216	WASHER *For 967177007-01, 967177008-01, 967045501-00*	1	-
27	819141614	WASHER *For 967177007-01, 967177008-01, 967045501-00*	4	-
27	819091216	WASHER *For 967177007-01, 967177008-01, 967045501-00*	1	-
28	521996501	NUT *For 967177007-01, 967177008-01, 967045501-00*	1	-
29	873800500	LOCK NUT *For 967177007-01, 967177008-01, 967045501-00*	1	-
1	590090803	TUBE	1	-
2	590090804	TUBE	1	-
3	532109553	SWITCH	2	-
4	585124705	BRACKET	2	-
5	539438282	BEARING *For 967177007-01, 967177008-01, 967045501-00*	4	-
5	532438282	BEARING UNIT *For 967844201-00*	4	-
6	587187701	CONTROL	2	-
7	577420001	LEVER	2	-
8	584927201	SPACER	2	-
9	539102720	GAS SPRING	2	-
10	581437501	BLOCK	2	-
11	539102845	SPRING	2	-
12	576850301	SPRING	1	-
13	539131799	KNOB	1	-
14	574811401	ROD	2	-
15	539116689	ROD END COUPLER	2	-
16	588692502	ROD	2	-

Ref.	Article N.	Description	Qty	Kit
17	579764601	JOINT	2	-
18	581223001	PLATE *For 967844201-00*	2	-
19	576850402	SCREW *For 967177007-01, 967177008-01, 967045501-00*	2	-
19	539990585	NUT *For 967177007-01, 967177008-01, 967045501-00*	4	-
20	574822701	SCREW *For 967844201-00*	4	-
21	874780844	BOLT *For 967177007-01, 967177008-01, 967045501-00*	2	-
21	596580801	BOLT *NOTE: If you order 596580801 you will need to also order key 30 532423063 in the same quantity.*	1	-
22	874780844	BOLT *For 967177007-01, 967177008-01, 967045501-00*	2	-
22	539976935	SCREW *For 967177007-01, 967177008-01, 967045501-00*	4	-
23	539976935	SCREW *For 967177007-01, 967177008-01, 967045501-00*	4	-
23	525544001	BOLT *For 967177007-01, 967177008-01, 967045501-00*	4	-
24	525544001	BOLT *For 967177007-01, 967177008-01, 967045501-00*	4	-
24	874490512	BOLT *For 967177007-01, 967177008-01, 967045501-00*	8	-
25	576850402	SCREW *For 967177007-01, 967177008-01, 967045501-00*	2	-
25	874490512	BOLT *For 967177007-01, 967177008-01, 967045501-00*	8	-
26	539991073	NUT	2	-
27	539990585	NUT *For 967177007-01, 967177008-01, 967045501-00*	4	-
28	539990717	NUT *For 967177007-01, 967177008-01, 967045501-00*	6	-
28	539108010	NUT *For 967177007-01, 967177008-01, 967045501-00*	2	-
29	539990717	NUT *For 967177007-01, 967177008-01, 967045501-00*	4	-
29	539112899	NUT, 5/16-18, NYLOC *For 967177007-01, 967177008-01, 967045501-00*	10	-
30	819111116	WASHER *For 967177007-01, 967177008-01, 967045501-00*	12	-

Ref.	Article N.	Description	Qty	Kit
30	532423063	WASHER *NOTE: If you order 532423063 you will need to also order key 30 596580801 in the same quantity.*	1	-
31	539990223	NUT	4	-
32	819111116	WASHER *For 967177007-01, 967177008-01, 967045501-00*	14	-
33	539130894	GRIP *For 967177007-01, 967177008-01, 967045501-00*	2	-
34	874780520	BOLT *For 967177007-01, 967177008-01, 967045501-00*	5	-
35	539108010	NUT *For 967177007-01, 967177008-01, 967045501-00*	2	-
36	595305701	SCREW	2	-
1	586955401	WHEEL ASSY -	2	-
2	581199501	WHEEL ASSY -	2	-
3	582746401	TIRE -	2	-
3	539102543	BEARING -	4	-
4	539102535	CAP -	2	-
5	586921902	FORK -	2	-
6	539102851	SEALING -	2	-
7	575334901	SPACER -	2	-
8	539101474	NIPPLE -	2	-
9	539102889	SPLIT PIN -	2	-
10	539105517	BOLT -	2	-
11	539102852	NUT -	2	-
12	521991101	NUT -	2	-
13	587653902	NUT -	8	-
14	819182212	WASHER -	2	-

SEAT

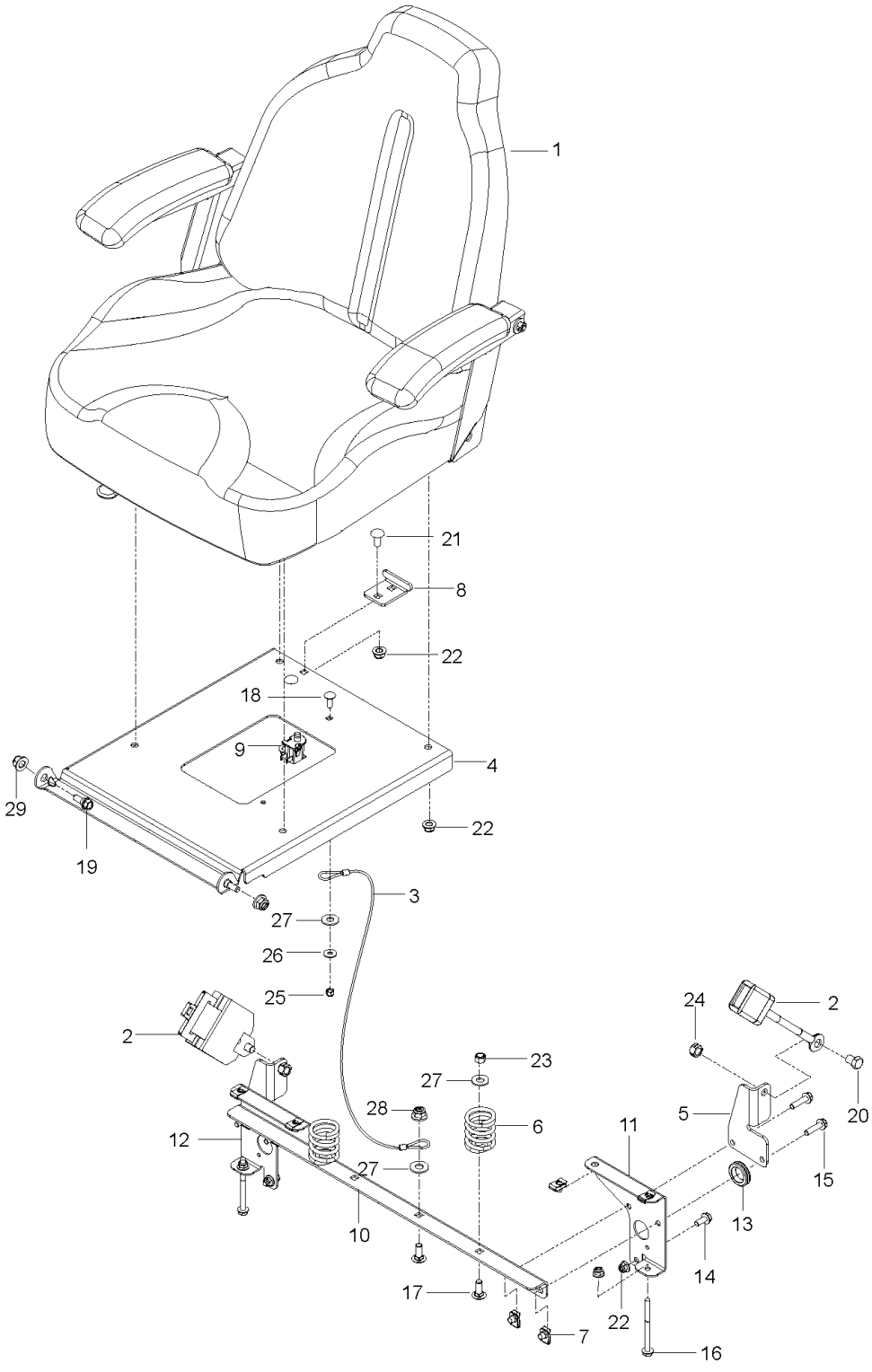

Ref.	Article N.	Description	Qty	Kit
1	586651402	PLATE -	1	-
2	574811001	PULLEY	1	-

Ref.	Article N.	Description	Qty	Kit
		-		
3	582042801	SOLENOID -	1	-
4	539101363	CLAMP -	1	-
5	584825501	HOSE ASSY -	1	-
6	575229902	BRACKET -	1	-
7	539102757	CABLE -	1	-
8	574607001	CLUTCH -	1	-
9	575017301	STOP -	1	-
10	539131604	MUFFLER ASSY -	1	-
11	583954501	TUBE -	1	-
12	583954801	TUBE -	1	-
13	586839701	GASKET -	2	-
14	532131563	COVER -	2	-
15	539102759	INSULATOR -	1	-
16	539912757	KEY -	1	-
17	539990071	BOLT -	1	-
18	817120616	SCREW -	4	-
19	539107271	SCREW -	2	-
20	874490512	BOLT -	8	-
21	581332802	BOLT -	1	-
22	539990302	HWST 1/4C X 3/8 -	1	-
23	539107475	BOLT -	2	-

Ref.	Article N.	Description	Qty	Kit
24	539108120	NUT -	4	-
25	539112899	NUT, 5/16-18, NYLOC -	10	-
26	539990053	WASHER -	1	-
27	539990247	WASHER -	1	-
1	586651402	PLATE	1	-
2	574846402	PLATE *For 967177008-01*	1	-
2	586670402	PLATE *For 967177007-01, 967045501-00*	1	-
3	574811001	PULLEY	1	-
4	539976688	PULLEY	1	-
5	532175820	PULLEY	1	-
6	574870901	DRIVE BELT	1	-
7	525435601	PIVOT	1	-
8	510206301	PIVOT	1	-
9	510041603	ARM	1	-
10	574607001	CLUTCH	1	-
11	575017302	STOP	1	-
12	539102757	CABLE *For 967177007-01, 967177008-01*	1	-
13	576701801	MUFFLER *For 967177007-01*	1	-
13	525750201	MUFFLER *For 967177008-01*	1	-
13	501451201	MUFFLER ASSY *For 967045501-00*	1	-
14	582042801	SOLENOID *For 967177007-01, 967177008-01*	1	-
15	510254401	SPRING	1	-
16	539114662	SHIELD, DUST	1	-
17	510254501	SHIELD	2	-
18	579150901	SHIELD *For 967177007-01, 967177008-01*	1	-
19	584825501	HOSE ASSY *For 967177008-01, 967045501-00*	1	-
20	522599001	ADAPTER *For 967177008-01*	1	-

Ref.	Article N.	Description	Qty	Kit
21	539101363	CLAMP *For 967177008-01, 967045501-00*	1	-
22	522837001	PLUG *For 967177008-01*	1	-
22	585807101	PLUG *For 967045501-00*	1	-
23	539912757	KEY	1	-
24	586839701	GASKET *For 967177007-01, 967177008-01*	2	-
25	532131563	COVER *For 967177007-01*	1	-
25	539102759	INSULATOR *For 967177008-01*	2	-
26	532131563	COVER *For 967177007-01*	2	-
27	539104763	CLIP	4	-
28	539100413	BOLT *For 967177007-01*	1	-
28	872140610	BOLT *For 967177008-01, 967045501-00*	1	-
29	872140622	BOLT *For 967045501-00*	1	-
29	539130235	RHSNB 3/8-16 X 2.75 GR5 ZD *For 967177007-01, 967177008-01*	1	-
30	872110508	BOLT *For 967177008-01*	2	-
31	581332802	BOLT	1	-
32	539103433	SCREW *For 967177007-01*	1	-
32	874780852	BOLT *For 967177008-01, 967045501-00*	1	-
33	525866201	BOLT *For 967177007-01*	1	-
33	874490632	SCREW *For 967177008-01, 967045501-00*	1	-
34	874490512	BOLT	11	-
35	874780408	BOLT *For 967045501-00*	1	-
35	539990071	BOLT *For 967177008-01*	1	-
36	817120616	SCREW *For 967177007-01, 967045501-00*	4	-

Ref.	Article N.	Description	Qty	Kit
36	539990563	SCREW *For 967177008-01*	4	-
37	592858702	BOLT	8	-
38	817490406	SCREW *For 967177008-01*	1	-
38	539990302	HWST 1/4C X 3/8 *For 967177007-01*	1	-
39	539990613	NUT *For 967177007-01*	1	-
40	539112899	NUT, 5/16-18, NYLOC	15	-
41	521991101	NUT	1	-
42	539200282	NUT	4	-
43	521996501	NUT *For 967177008-01, 967045501-00*	2	-
44	539108120	NUT *For 967177007-01, 967177008-01*	4	-
45	539990053	WASHER	1	-
46	539115528	1/2` CONTACT BELLSPR	1	-
47	539990247	WASHER	1	-
48	539109562	WASHER	1	-
50	539109554	WASHER *For 967177007-01*	2	-
50	819182212	WASHER *For 967177008-01, 967045501-00*	2	-
51	539111897	WASHER	1	-
52	819141614	WASHER	1	-
53	539990118	WASHER *For 967177008-01, 967045501-00*	4	-
54	539990613	NUT *For 967177007-01*	1	-
54	521996501	NUT *For 967177008-01, 967045501-00*	2	-
55	532183906	SCREW *For 967177007-01*	4	-
55	532192334	SCREW *For 967045501-00*	4	-
91	501279301	HARNESS *For 967045501-00*	1	-
92	586839901	GASKET *For 967045501-00, NOT SHOWN*	2	-
93	587450101	HARNESS *For 967045501-00*	1	-

Ref.	Article N.	Description	Qty	Kit
94	574825801	KIT *For 967045501-00, SPARK ARRESTOR*	1	-
1	501656001	FRAME -	1	-
2	586893002	GUARD -	1	-
3	586867702	SUPPORT -	1	-
4	586560101	BRACKET -	1	-
5	586560201	BRACKET -	1	-
6	539132744	PLATE -	1	-
7	539132380	PLATE -	1	-
8	594037402	BRACKET *For all EXCEPT 967844201-00, BLK*	1	-
8	587048702	BRACKET *For 967844201-00*	1	-
9	575245202	BRACKET -	2	-
10	575533602	MOUNT -	2	-
11	900000002	DUMMY PART *For all EXCEPT 967844201-00, 593 79 55-05 Guard, Skid Gray*	1	-
11	575230402	SHIELD *For 967844201-00*	1	-
12	539132859	HEAT SHIELD -	1	-
13	587990501	CAP -	2	-
14	593634302	STOP *For all EXCEPT 967844201-00*	2	-
14	505256401	STOP *For 967844201-00*	2	-
15	539102587	ABSORBER -	7	-
16	539105974	GROMMET -	1	-
17	522801401	BUMPER *For 967844201-00*	2	-
17	874490644	BOLT	2	-

Ref.	Article N.	Description	Qty	Kit
		For 967844201-00		
18	539104411	KNOB -	1	-
19	539200715	PIN *For 967844201-00*	2	-
19	874490512	BOLT *For 967844201-00*	1	-
20	539133006	BOLT *For 967844201-00*	2	-
20	574388001	PIN *For 967844201-00*	2	-
21	539104763	CLIP *For 967844201-00*	5	-
22	539133006	BOLT *For 967844201-00*	2	-
22	525544001	BOLT *For 967844201-00*	1	-
23	874490644	BOLT *For 967844201-00*	2	-
23	539102335	BOLT *For 967844201-00*	2	-
24	874490512	BOLT *For 967844201-00*	18	-
24	539109117	BOLT *For all EXCEPT 967844201-00*	2	-
25	872140508	BOLT *For all EXCEPT 967844201-00*	3	-
25	874490560	BOLT *For 967844201-00*	4	-
26	525544001	BOLT *For 967844201-00*	1	-
26	872110606	BOLT *For all EXCEPT 967844201-00*	6	-
27	539102335	BOLT *For 967844201-00*	2	-
27	539200282	NUT *For 967844201-00*	6	-
28	874490560	BOLT *For 967844201-00*	4	-
28	580754601	BOLT *For 967844201-00*	6	-
29	872140506	BOLT *For 967844201-00*	6	-

Ref.	Article N.	Description	Qty	Kit
29	521996501	NUT *For all EXCEPT 967844201-00*	2	-
30	539990208	SCREW *For 967844201-00*	3	-
30	539112899	NUT, 5/16-18, NYLOC *For all EXCEPT 967844201-00*	12	-
31	539990645	BOLT -	2	-
32	539990316	BOLT *For 967844201-00*	4	-
32	819111116	WASHER *For all EXCEPT 967844201-00*	2	-
33	539200282	NUT *For 967844201-00*	6	-
33	539990250	WASHER *For all EXCEPT 967844201-00*	1	-
34	521996501	NUT *For all EXCEPT 967844201-00*	2	-
35	539112899	NUT, 5/16-18, NYLOC *For all EXCEPT 967844201-00*	13	-
36	525829101	NUT -	6	-
37	539976978	NUT *For 967844201-00*	2	-
37	873800400	NUT *For all EXCEPT 967844201-00*	4	-
38	819111116	WASHER *For all EXCEPT 967844201-00*	2	-
39	539990250	WASHER *For all EXCEPT 967844201-00*	1	-
40	819132416	WASHER -	2	-
41	539102653	WASHER *For 967844201-00*	4	-
42	539104763	CLIP *For 967844201-00*	8	-
43	539102653	WASHER *For 967844201-00*	4	-
62	575274801	KIT *For 967844201-00, NOT SHOWN PROTECTION FRAME*	1	-
1	586670402	PLATE	1	-
2	539976688	PULLEY	1	-
3	532175820	PULLEY	1	-

Ref.	Article N.	Description	Qty	Kit
4	510041603	ARM	1	-
5	574870901	DRIVE BELT	1	-
6	584994202	SHIELD	2	-
7	539102587	ABSORBER	2	-
8	510206301	PIVOT	1	-
9	525435601	PIVOT	1	-
10	539104763	CLIP	4	-
11	510254501	SHIELD	2	-
12	539114662	SHIELD, DUST	1	-
13	510254401	SPRING	1	-
14	872140610	BOLT	1	-
15	539130235	RHSNB 3/8-16 X 2.75 GR5 ZD	1	-
16	874490632	SCREW	1	-
17	874490512	BOLT	3	-
18	592858702	BOLT	9	-
19	874780852	BOLT	1	-
20	521991101	NUT	1	-
21	521996501	NUT	2	-
22	539112899	NUT, 5/16-18, NYLOC	5	-
23	539200282	NUT	4	-
24	539990613	NUT	1	-
25	539115528	1/2` CONTACT BELLSPR	1	-
26	819182212	WASHER	2	-
27	819141614	WASHER	1	-
28	539109562	WASHER	1	-
31	539111897	WASHER	1	-
1	574569101	TRANSMISSION *LEFT*	1	-
2	574569102	TRANSMISSION *RIGHT*	1	-
3	593278902	BRACKET *For 967177008-01, 967045501-00, 967844201-00*	1	-
3	575017102	BRACKET *For 967177007-01*	1	-
4	593279002	BRACKET *For 967177008-01, 967045501-00, 967844201-00*	1	-
4	575017002	BRACKET *For 967177007-01*	1	-
5	539131616	LINKAGE. LEFT BYPASS	1	-
6	539131618	LINKAGE	1	-

Ref.	Article N.	Description	Qty	Kit
7	574892101	HOSE ASSY	2	-
8	586067501	HOSE	1	-
9	585318201	TANK	1	-
10	584994202	SHIELD	2	-
11	539113466	OIL FILTER	2	-
12	530095646	FUEL FILTER	1	-
13	586072701	CAP	1	-
14	539976988	PIN	2	-
15	539102587	ABSORBER	2	-
16	539976988	PIN	2	-
17	539990643	BOLT	1	-
18	592858702	BOLT	9	-
19	539101721	SCREW *For 967177007-01*	4	-
19	539976978	NUT *For 967177008-01, 967045501-00, 967844201-00*	4	-
20	539112899	NUT, 5/16-18, NYLOC	2	-
21	574233801	SCREW	4	-
22	539990118	WASHER	4	-
23	539112899	NUT, 5/16-18, NYLOC	8	-
24	596204101	WASHER	2	-
25	539990118	WASHER	2	-
26	539990187	WASHER	4	-
27	539990055	WASHER	4	-
28	539990122	WASHER	2	-
1	585722303	FUEL TANK ASSY	1	-
2	539107593	CONSOLE	1	-
3	539102436	BATTERY	1	-
4	588107201	BRACKET *For 967045501-00, 967844201-00*	1	-
4	593634404	BRACKET *For 967177008-01*	1	-
4	510030001	BRACKET *For 967177007-01*	1	-
5	588030801	CABLE	1	-
6	588030701	CABLE	1	-
7	574841204	PLATE *For 967177007-01, 967045501-00, 967844201-00*	1	-
7	592877402	PLATE *For 967177008-01*	1	-

Ref.	Article N.	Description	Qty	Kit
8	582107602	SWITCH *For 967177007-01, 967177008-01, 967844201-00*	1	-
8	539131627	SWITCH *For 967045501-00*	1	-
9	574455401	SWITCH	1	-
10	581878301	LIGHT *For 967045501-00*	1	-
10	584971801	CHOKE *For 967844201-00*	1	-
10	574206903	CABLE *For 967177007-01, 967177008-01*	1	-
11	539102732	THROTTLE *For 967045501-00, 967844201-00*	1	-
11	539112438	THROTTLE CABLE *For 967177007-01, 967177008-01*	1	-
12	539133049	KNOB	1	-
13	586123901	FUEL HOSE *For 967177007-01, 967045501-00*	1	-
13	586123903	FUEL HOSE *For 967177008-01, 967844201-00*	1	-
14	576469201	FITTING	1	-
15	575018101	CAP	1	-
16	576618101	TANK VENT	1	-
17	539916325	VALVE *For 967844201-00*	1	-
18	576618201	GROMMET	1	-
19	539105245	GROMMET	1	-
20	539103178	NUT CAP	1	-
21	575436501	CLAMP	2	-
22	532123487	HOSE CLAMP *For 967844201-00*	4	-
23	587044810	HOSE *For 967844201-00*	2	-
24	587044539	HOSE *For 967045501-00*	1	-
24	587044536	HOSE *For 967177008-01, CUT TO LENGTH*	1	-
24	587044555	HOSE *For 967844201-00*	1	-
24	587044564	HOSE *For 967177007-01, CUT TO FIT*	1	-
25	574455501	KEY	1	-

Ref.	Article N.	Description	Qty	Kit
26	586161801	HOUR METER	1	-
28	582484201	SCREW	6	-
29	588843202	SUPPORT *For 967177008-01, 967844201-00*	2	-
29	539131671	SUPPORT *For 967177007-01, 967045501-00*	2	-
30	510064001	HOOK	2	-
31	532435395	TERMINAL COVER	1	-
32	539976934	SCREW *For 967177008-01, 967844201-00*	2	-
32	874780512	SCREW *For 967177007-01, 967045501-00*	2	-
33	872140506	BOLT *For 967177007-01, 967045501-00*	2	-
33	539990316	BOLT *For 967177008-01, 967844201-00*	2	-
34	539990411	SCREW *For 967045501-00, 967844201-00*	6	-
34	817490516	SCREW *For 967045501-00, 967844201-00*	3	-
35	539990411	SCREW *For 967045501-00, 967844201-00*	6	-
35	817490516	SCREW *For 967045501-00, 967844201-00*	3	-
36	539976977	NUT	2	-
37	539990997	NUT	2	-
38	539112899	NUT, 5/16-18, NYLOC	13	-
39	819070818	WASHER	4	-
40	819111116	WASHER	2	-
41	539990187	WASHER	2	-
42	532197802	SWITCH *For 967177008-01, 967177007-01*	1	-
42	539113792	SWITCH *For 967045501-00*	1	-
43	532109553	SWITCH *For 967177007-01, 967177008-01, 967045501-00*	2	-
44	581223001	PLATE *For 967177007-01, 967177008-01, 967045501-00*	2	-
45	574822701	SCREW *For 967177007-01, 967177008-01, 967045501-00*	4	-
63	589669901	HARNESS *For 967177007-01, 967844201-00*	1	-

Ref.	Article N.	Description	Qty	Kit
64	532409615	HARNESS *For 967177007-01, 967844201-00*	1	-
65	501279301	HARNESS *For 967045501-00*	1	-
66	900000002	DUMMY PART *For 967177008-01, 589 66 99-02 Harness w/Brake Switch*	1	-
1	581505401	DECK -	1	-
2	539104335	DRIVE BELT -	1	-
3	539113312	BLADE -	3	-
4	539131898	SPINDLE -	3	-
5	539103427	BUSHING -	1	-
6	539112169	BLADE BUSHING -	2	-
7	589766101	PULLEY -	3	-
8	539113300	PULLEY -	3	-
9	539112198	ARM -	1	-
10	539113319	SHIELD -	1	-
11	539113322	SHIELD -	1	-
12	584859402	BRACKET -	2	-
13	584859404	BRACKET -	2	-
14	539130901	CHUTE -	1	-
15	539113317	PLATE -	1	-
16	585323901	BEARING *For 967177008-01, 967045501-00*	3	-
16	532110485	BEARING *For 967177007-01, 967844201-00*	3	-
17	539103256	SPRING -	1	-
18	581606106	BRACKET	1	-

Ref.	Article N.	Description	Qty	Kit
		For 967844201-00		
18	581606102	BRACKET *For 967177007-01, 967177008-01, 967045501-00, ORG*	1	-
19	539130917	BRACKET -	1	-
20	532176066	ROLLER -	1	-
21	532179127	PIN -	1	-
22	539131859	PIN -	2	-
23	532133957	WHEEL -	2	-
24	539976998	NIPPLE -	1	-
25	876020412	SPLIT PIN -	2	-
26	581606102	BRACKET *For 967177007-01, 967177008-01, 967045501-00, ORG*	1	-
26	592964402	BRACKET *For 967177007-01, 967177008-01, 967045501-00*	1	-
27	532187291	SHAFT -	3	-
28	539104763	CLIP *For 967844201-00*	8	-
28	874780648	BOLT *For 967177007-01, 967177008-01, 967045501-00*	2	-
29	539108396	BOLT -	2	-
30	539990563	SCREW -	2	-
31	539976934	SCREW -	8	-
32	539990582	SCREW -	1	-
33	539103433	SCREW *For 967177007-01, 967844201-00*	1	-
33	589343201	MANDREL *For 967177008-01, 967045501-00*	1	-
34	874780520	BOLT -	2	-
35	539990799	BOLT -	3	-

Ref.	Article N.	Description	Qty	Kit
36	872110508	BOLT *For 967177007-01*	2	-
36	539107271	SCREW *For 967177008-01, 967045501-00, 967844201-00*	2	-
37	539100472	SCREW -	2	-
38	539102933	SCREW -	2	-
39	532193003	SCREW -	3	-
40	532137644	SCREW -	2	-
41	584953901	BOLT -	12	-
42	874780648	BOLT *For 967177007-01, 967177008-01, 967045501-00*	2	-
42	532400234	NUT *For 967177007-01, 967177008-01, 967045501-00*	3	-
43	539990717	NUT -	3	-
44	539990196	NUT -	2	-
45	539976979	NUT -	6	-
46	539101331	NUT *For 967177007-01*	1	-
46	873800800	NUT *For 967177008-01, 967045501-00, 967844201-00*	1	-
47	539112899	NUT, 5/16-18, NYLOC -	8	-
48	596134801	HEXAGON NUT -	3	-
49	539106504	WASHER -	2	-
50	819121414	WASHER *For 967844201-00*	10	-
50	539990692	WASHER *For 967177007-01, 967177008-01, 967045501-00*	11	-
51	539109600	WASHER -	8	-
52	539102243	WASHER -	1	-
53	539990550	WASHER	1	-

Ref.	Article N.	Description	Qty	Kit
		For 967177007-01		
53	819182212	WASHER *For 967177008-01, 967045501-00, 967844201-00*	1	-
54	532187690	WASHER -	3	-
55	819141614	WASHER -	3	-
1	510408301	PEDAL -	1	-
2	539110808	CROSS LINK -	2	-
3	586701701	SPACER -	2	-
4	539131861	SPACER. .3 -	1	-
5	586928702	LIFT -	1	-
6	584392702	PLATE -	2	-
7	539131897	BELLCRANK -	1	-
8	539131853	BELLCRANK -	1	-
9	588812102	BRACKET -	1	-
10	588812002	BRACKET -	1	-
11	539131566	LATCH -	1	-
12	539105059	ROPE -	1	-
13	539131791	MOUNT -	1	-
14	532195161	STUD -	4	-
15	539131792	SPRING -	1	-
16	539112896	BOLT -	1	-
17	539102642	SPRING -	1	-
18	539132734	SPRING. TORSION -	1	-

Ref.	Article N.	Description	Qty	Kit
19	539131850	HEIGHT. ADJUST. DECK -	1	-
20	539131860	PIVOT. LATCH. TRANSPORT -	1	-
21	539104808	SUPPORT -	4	-
22	539132182	PIN -	1	-
23	539132851	GRIP -	1	-
24	539115501	COTTER -	4	-
25	532194209	SPRING -	2	-
26	874780648	BOLT -	1	-
27	539990646	BOLT -	1	-
28	874780544	BOLT -	4	-
29	539108181	HCS 1/2-13 X 1-3/4 GR 8 ZD -	2	-
30	539990563	SCREW -	4	-
31	539112899	NUT, 5/16-18, NYLOC -	5	-
32	539976979	NUT -	4	-
33	873800800	NUT -	2	-
34	873900500	NUT -	2	-
35	539200282	NUT -	2	-
36	873900600	NUT -	4	-
37	819141614	WASHER -	1	-
38	539115528	1/2` CONTACT BELLSPR -	1	-
39	539109554	WASHER -	2	-
40	819191912	WASHER	2	-

Ref.	Article N.	Description	Qty	Kit
		-		
41	539991043	BUSHING -	10	-
1	510408301	PEDAL -	1	-
2	539110808	CROSS LINK -	2	-
3	586701701	SPACER -	2	-
4	539131861	SPACER. .3 -	1	-
5	586928702	LIFT -	1	-
6	584392702	PLATE -	2	-
7	539131897	BELLCRANK -	1	-
8	539131853	BELLCRANK -	1	-
9	539112223	STRUT -	2	-
10	539109693	LIFT CHAIN - 3 LINK -	4	-
11	539131566	LATCH -	1	-
12	539105059	ROPE -	1	-
13	539991043	BUSHING *For 967177007-01*	10	-
13	819211616	WASHER *For 967177008-01, 967045501-00*	1	-
14	539132017	MOUNT -	2	-
15	532194209	SPRING *For 967177008-01, 967045501-00*	1	-
16	539112896	BOLT -	1	-
17	539102642	SPRING *For 967177007-01*	1	-
17	539131790	SPRING *For 967177008-01, 967045501-00*	1	-
18	539132734	SPRING. TORSION -	1	-

Ref.	Article N.	Description	Qty	Kit
19	539131850	HEIGHT. ADJUST. DECK -	1	-
20	539131860	PIVOT. LATCH. TRANSPORT -	1	-
21	539104808	SUPPORT -	4	-
22	539132182	PIN -	1	-
24	539132851	GRIP -	1	-
25	539115501	COTTER -	6	-
26	874780544	BOLT *For 967177008-01, 967045501-00*	4	-
26	539101721	SCREW *For 967177007-01*	4	-
27	539108181	HCS 1/2-13 X 1-3/4 GR 8 ZD -	2	-
28	539976941	SCREW -	4	-
29	539101175	SCREW -	4	-
30	874780648	BOLT -	1	-
31	539990646	BOLT -	1	-
32	539108073	BOLT -	4	-
33	539200282	NUT -	2	-
34	539132019	NUT -	8	-
35	539102582	NUT -	8	-
36	539112899	NUT, 5/16-18, NYLOC *For 967177007-01*	5	-
37	539976979	NUT -	4	-
38	539101331	NUT *For 967177007-01*	1	-
38	873800800	NUT *For 967177008-01, 967045501-00*	1	-
39	819141614	WASHER	1	-

Ref.	Article N.	Description	Qty	Kit
		-		
40	539115528	1/2` CONTACT BELLSPR -	2	-
41	539109554	WASHER *For 967177007-01*	2	-
41	819182212	WASHER *For 967177008-01, 967045501-00*	2	-
42	539112899	NUT, 5/16-18, NYLOC *For 967177007-01*	5	-
43	539131791	MOUNT *For 967177007-01*	1	-
44	539131792	SPRING *For 967177007-01*	1	-
1	539132151	ARM -	1	-
2	539105036	GRIP -	1	-
3	575229602	BRACKET -	1	-
4	575229702	BRACKET -	1	-
5	586738802	LEVER -	1	-
6	575230201	SPRING -	2	-
7	575230301	SPRING -	2	-
8	586830002	MOUNT -	1	-
9	539132154	ACTUATOR -	1	-
10	539132153	BELLCRANK -	2	-
11	539132424	LINKAGE. BRAKE -	1	-
12	575229802	BRACKET -	2	-
13	539132161	BLADE BUSHING -	4	-
14	539104763	CLIP -	3	-
15	582121801	CABLE ASSY -	1	-

Ref.	Article N.	Description	Qty	Kit
16	582122001	CABLE ASSY -	2	-
17	505280001	TIE WRAP -	2	-
18	539990643	BOLT -	4	-
19	539108396	BOLT -	1	-
20	539990563	SCREW -	2	-
21	539990209	SCREW -	1	-
22	539110303	BOLT -	2	-
23	539990645	BOLT -	2	-
24	539990316	BOLT -	1	-
25	539131780	BOLT -	1	-
26	874490512	BOLT -	1	-
27	539112899	NUT, 5/16-18, NYLOC -	2	-
28	539990585	NUT -	5	-
29	539990717	NUT -	1	-
30	521996501	NUT -	2	-
31	539115617	NUT -	2	-
32	539200282	NUT -	2	-
33	539976978	NUT -	4	-
34	539107897	NUT -	2	-
35	539990055	WASHER -	8	-
36	539133007	WASHER -	1	-
37	539990122	WASHER	2	-

Ref.	Article N.	Description	Qty	Kit
		-		
38	819182212	WASHER -	1	-
39	532197802	SWITCH -	1	-
1	593564002	ARM -	1	-
2	539105036	GRIP -	1	-
3	593279202	BRACKET -	1	-
4	593279902	BRACKET -	1	-
5	590337701	GEAR -	1	-
6	575230201	SPRING -	2	-
7	575230301	SPRING -	2	-
8	590631502	MOUNT -	1	-
9	590204501	GEAR -	1	-
10	539990196	NUT -	2	-
11	596018303	BRACKET -	6	-
12	539104763	CLIP -	3	-
13	582121801	CABLE ASSY -	1	-
14	582122001	CABLE ASSY -	1	-
15	582121801	CABLE ASSY -	2	-
16	582122001	CABLE ASSY -	1	-
17	596018303	BRACKET -	1	-
18	593239802	ACTUATOR -	1	-
19	539990643	BOLT -	4	-

Ref.	Article N.	Description	Qty	Kit
20	539108396	BOLT -	1	-
21	525544001	BOLT -	3	-
22	539110303	BOLT -	2	-
23	539990645	BOLT -	2	-
24	539990316	BOLT -	1	-
25	539131780	BOLT -	1	-
26	874490512	BOLT -	1	-
27	525544001	BOLT -	1	-
28	539112899	NUT, 5/16-18, NYLOC -	1	-
29	539990585	NUT -	2	-
30	539990717	NUT -	1	-
31	521996501	NUT -	2	-
32	539115617	NUT -	2	-
33	539200282	NUT -	3	-
34	539976978	NUT -	4	-
35	539107897	NUT -	2	-
36	539990196	NUT -	2	-
37	539990055	WASHER -	8	-
38	819182212	WASHER -	1	-
39	539990122	WASHER -	2	-
40	819182212	WASHER -	1	-
41	595846701	BRAKE ASSY	1	-

Ref.	Article N.	Description	Qty	Kit
		NOT SHOWN		
1	501580402	SEAT -	1	-
2	539130359	BELT -	1	-
3	539103247	WIRE -	1	-
4	501762102	SUPPORT -	1	-
5	584916802	MOUNT -	2	-
6	587613301	SPRING -	2	-
7	539104763	CLIP -	8	-
8	539130793	STOP -	1	-
9	539119741	SWITCH -	1	-
10	584809102	SUPPORT -	1	-
11	584990102	SUPPORT -	1	-
12	584990202	SUPPORT -	1	-
13	539105974	GROMMET -	1	-
14	874490512	BOLT -	2	-
15	525544001	BOLT -	4	-
16	874490560	BOLT -	2	-
17	539990645	BOLT -	3	-
18	539115620	1/4-20X3/4 CARR BLT -	1	-
19	539130896	BOLT -	2	-
20	539112034	BOLT *For 967844201-00*	2	-
20	539124775	SCREW *For 967177007-01, 967177008-01, 967045501-00*	2	-

Ref.	Article N.	Description	Qty	Kit
21	872050506	BOLT *For 967844201-00*	2	-
22	539112899	NUT, 5/16-18, NYLOC -	9	-
23	539976979	NUT -	2	-
24	539990394	NUT -	2	-
25	539976978	NUT -	1	-
26	819141614	WASHER *For 967177007-01, 967177008-01, 967045501-00*	4	-
26	819091216	WASHER *For 967177007-01, 967177008-01, 967045501-00*	1	-
27	819141614	WASHER *For 967177007-01, 967177008-01, 967045501-00*	4	-
27	819091216	WASHER *For 967177007-01, 967177008-01, 967045501-00*	1	-
28	521996501	NUT *For 967177007-01, 967177008-01, 967045501-00*	1	-
29	873800500	LOCK NUT *For 967177007-01, 967177008-01, 967045501-00*	1	-
1	590090803	TUBE	1	-
2	590090804	TUBE	1	-
3	532109553	SWITCH	2	-
4	585124705	BRACKET	2	-
5	539438282	BEARING *For 967177007-01, 967177008-01, 967045501-00*	4	-
5	532438282	BEARING UNIT *For 967844201-00*	4	-
6	587187701	CONTROL	2	-
7	577420001	LEVER	2	-
8	584927201	SPACER	2	-
9	539102720	GAS SPRING	2	-
10	581437501	BLOCK	2	-
11	539102845	SPRING	2	-
12	576850301	SPRING	1	-
13	539131799	KNOB	1	-
14	574811401	ROD	2	-
15	539116689	ROD END COUPLER	2	-
16	588692502	ROD	2	-

Ref.	Article N.	Description	Qty	Kit
17	579764601	JOINT	2	-
18	581223001	PLATE *For 967844201-00*	2	-
19	576850402	SCREW *For 967177007-01, 967177008-01, 967045501-00*	2	-
19	539990585	NUT *For 967177007-01, 967177008-01, 967045501-00*	4	-
20	574822701	SCREW *For 967844201-00*	4	-
21	874780844	BOLT *For 967177007-01, 967177008-01, 967045501-00*	2	-
21	596580801	BOLT *NOTE: If you order 596580801 you will need to also order key 30 532423063 in the same quantity.*	1	-
22	874780844	BOLT *For 967177007-01, 967177008-01, 967045501-00*	2	-
22	539976935	SCREW *For 967177007-01, 967177008-01, 967045501-00*	4	-
23	539976935	SCREW *For 967177007-01, 967177008-01, 967045501-00*	4	-
23	525544001	BOLT *For 967177007-01, 967177008-01, 967045501-00*	4	-
24	525544001	BOLT *For 967177007-01, 967177008-01, 967045501-00*	4	-
24	874490512	BOLT *For 967177007-01, 967177008-01, 967045501-00*	8	-
25	576850402	SCREW *For 967177007-01, 967177008-01, 967045501-00*	2	-
25	874490512	BOLT *For 967177007-01, 967177008-01, 967045501-00*	8	-
26	539991073	NUT	2	-
27	539990585	NUT *For 967177007-01, 967177008-01, 967045501-00*	4	-
28	539990717	NUT *For 967177007-01, 967177008-01, 967045501-00*	6	-
28	539108010	NUT *For 967177007-01, 967177008-01, 967045501-00*	2	-
29	539990717	NUT *For 967177007-01, 967177008-01, 967045501-00*	4	-
29	539112899	NUT, 5/16-18, NYLOC *For 967177007-01, 967177008-01, 967045501-00*	10	-
30	819111116	WASHER *For 967177007-01, 967177008-01, 967045501-00*	12	-

Ref.	Article N.	Description	Qty	Kit
30	532423063	WASHER *NOTE: If you order 532423063 you will need to also order key 30 596580801 in the same quantity.*	1	-
31	539990223	NUT	4	-
32	819111116	WASHER *For 967177007-01, 967177008-01, 967045501-00*	14	-
33	539130894	GRIP *For 967177007-01, 967177008-01, 967045501-00*	2	-
34	874780520	BOLT *For 967177007-01, 967177008-01, 967045501-00*	5	-
35	539108010	NUT *For 967177007-01, 967177008-01, 967045501-00*	2	-
36	595305701	SCREW	2	-
1	586955401	WHEEL ASSY -	2	-
2	581199501	WHEEL ASSY -	2	-
3	582746401	TIRE -	2	-
3	539102543	BEARING -	4	-
4	539102535	CAP -	2	-
5	586921902	FORK -	2	-
6	539102851	SEALING -	2	-
7	575334901	SPACER -	2	-
8	539101474	NIPPLE -	2	-
9	539102889	SPLIT PIN -	2	-
10	539105517	BOLT -	2	-
11	539102852	NUT -	2	-
12	521991101	NUT -	2	-
13	587653902	NUT -	8	-
14	819182212	WASHER -	2	-

STEERING

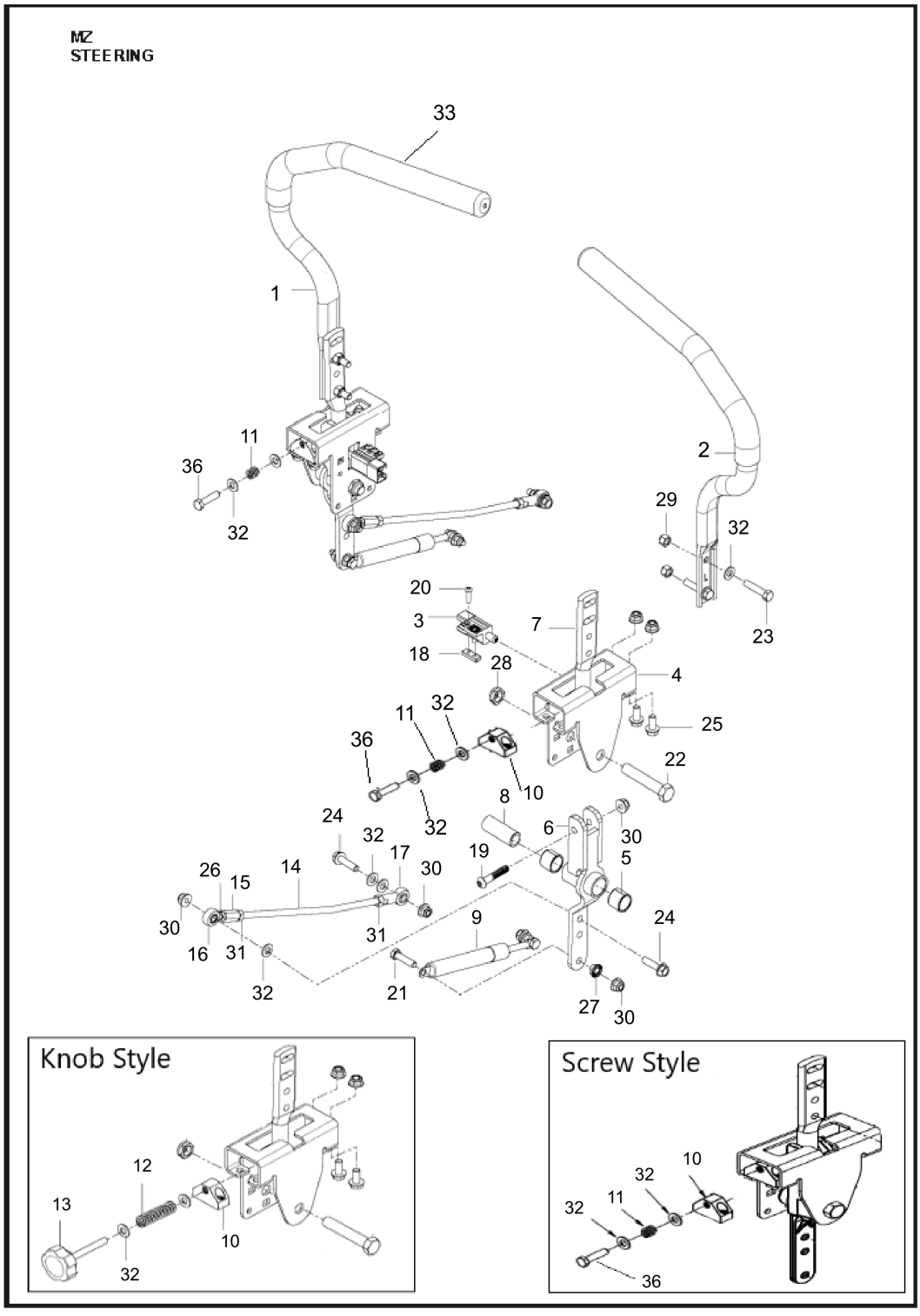

Ref.	Article N.	Description	Qty	Kit
1	586651402	PLATE -	1	-
2	574811001	PULLEY	1	-

Ref.	Article N.	Description	Qty	Kit
		-		
3	582042801	SOLENOID -	1	-
4	539101363	CLAMP -	1	-
5	584825501	HOSE ASSY -	1	-
6	575229902	BRACKET -	1	-
7	539102757	CABLE -	1	-
8	574607001	CLUTCH -	1	-
9	575017301	STOP -	1	-
10	539131604	MUFFLER ASSY -	1	-
11	583954501	TUBE -	1	-
12	583954801	TUBE -	1	-
13	586839701	GASKET -	2	-
14	532131563	COVER -	2	-
15	539102759	INSULATOR -	1	-
16	539912757	KEY -	1	-
17	539990071	BOLT -	1	-
18	817120616	SCREW -	4	-
19	539107271	SCREW -	2	-
20	874490512	BOLT -	8	-
21	581332802	BOLT -	1	-
22	539990302	HWST 1/4C X 3/8 -	1	-
23	539107475	BOLT -	2	-

Ref.	Article N.	Description	Qty	Kit
24	539108120	NUT -	4	-
25	539112899	NUT, 5/16-18, NYLOC -	10	-
26	539990053	WASHER -	1	-
27	539990247	WASHER -	1	-
1	586651402	PLATE	1	-
2	574846402	PLATE *For 967177008-01*	1	-
2	586670402	PLATE *For 967177007-01, 967045501-00*	1	-
3	574811001	PULLEY	1	-
4	539976688	PULLEY	1	-
5	532175820	PULLEY	1	-
6	574870901	DRIVE BELT	1	-
7	525435601	PIVOT	1	-
8	510206301	PIVOT	1	-
9	510041603	ARM	1	-
10	574607001	CLUTCH	1	-
11	575017302	STOP	1	-
12	539102757	CABLE *For 967177007-01, 967177008-01*	1	-
13	576701801	MUFFLER *For 967177007-01*	1	-
13	525750201	MUFFLER *For 967177008-01*	1	-
13	501451201	MUFFLER ASSY *For 967045501-00*	1	-
14	582042801	SOLENOID *For 967177007-01, 967177008-01*	1	-
15	510254401	SPRING	1	-
16	539114662	SHIELD, DUST	1	-
17	510254501	SHIELD	2	-
18	579150901	SHIELD *For 967177007-01, 967177008-01*	1	-
19	584825501	HOSE ASSY *For 967177008-01, 967045501-00*	1	-
20	522599001	ADAPTER *For 967177008-01*	1	-

Ref.	Article N.	Description	Qty	Kit
21	539101363	CLAMP *For 967177008-01, 967045501-00*	1	-
22	522837001	PLUG *For 967177008-01*	1	-
22	585807101	PLUG *For 967045501-00*	1	-
23	539912757	KEY	1	-
24	586839701	GASKET *For 967177007-01, 967177008-01*	2	-
25	532131563	COVER *For 967177007-01*	1	-
25	539102759	INSULATOR *For 967177008-01*	2	-
26	532131563	COVER *For 967177007-01*	2	-
27	539104763	CLIP	4	-
28	539100413	BOLT *For 967177007-01*	1	-
28	872140610	BOLT *For 967177008-01, 967045501-00*	1	-
29	872140622	BOLT *For 967045501-00*	1	-
29	539130235	RHSNB 3/8-16 X 2.75 GR5 ZD *For 967177007-01, 967177008-01*	1	-
30	872110508	BOLT *For 967177008-01*	2	-
31	581332802	BOLT	1	-
32	539103433	SCREW *For 967177007-01*	1	-
32	874780852	BOLT *For 967177008-01, 967045501-00*	1	-
33	525866201	BOLT *For 967177007-01*	1	-
33	874490632	SCREW *For 967177008-01, 967045501-00*	1	-
34	874490512	BOLT	11	-
35	874780408	BOLT *For 967045501-00*	1	-
35	539990071	BOLT *For 967177008-01*	1	-
36	817120616	SCREW *For 967177007-01, 967045501-00*	4	-

Ref.	Article N.	Description	Qty	Kit
36	539990563	SCREW *For 967177008-01*	4	-
37	592858702	BOLT	8	-
38	817490406	SCREW *For 967177008-01*	1	-
38	539990302	HWST 1/4C X 3/8 *For 967177007-01*	1	-
39	539990613	NUT *For 967177007-01*	1	-
40	539112899	NUT, 5/16-18, NYLOC	15	-
41	521991101	NUT	1	-
42	539200282	NUT	4	-
43	521996501	NUT *For 967177008-01, 967045501-00*	2	-
44	539108120	NUT *For 967177007-01, 967177008-01*	4	-
45	539990053	WASHER	1	-
46	539115528	1/2` CONTACT BELLSPR	1	-
47	539990247	WASHER	1	-
48	539109562	WASHER	1	-
50	539109554	WASHER *For 967177007-01*	2	-
50	819182212	WASHER *For 967177008-01, 967045501-00*	2	-
51	539111897	WASHER	1	-
52	819141614	WASHER	1	-
53	539990118	WASHER *For 967177008-01, 967045501-00*	4	-
54	539990613	NUT *For 967177007-01*	1	-
54	521996501	NUT *For 967177008-01, 967045501-00*	2	-
55	532183906	SCREW *For 967177007-01*	4	-
55	532192334	SCREW *For 967045501-00*	4	-
91	501279301	HARNESS *For 967045501-00*	1	-
92	586839901	GASKET *For 967045501-00, NOT SHOWN*	2	-
93	587450101	HARNESS *For 967045501-00*	1	-

Ref.	Article N.	Description	Qty	Kit
94	574825801	KIT *For 967045501-00, SPARK ARRESTOR*	1	-
1	501656001	FRAME -	1	-
2	586893002	GUARD -	1	-
3	586867702	SUPPORT -	1	-
4	586560101	BRACKET -	1	-
5	586560201	BRACKET -	1	-
6	539132744	PLATE -	1	-
7	539132380	PLATE -	1	-
8	594037402	BRACKET *For all EXCEPT 967844201-00, BLK*	1	-
8	587048702	BRACKET *For 967844201-00*	1	-
9	575245202	BRACKET -	2	-
10	575533602	MOUNT -	2	-
11	900000002	DUMMY PART *For all EXCEPT 967844201-00, 593 79 55-05 Guard, Skid Gray*	1	-
11	575230402	SHIELD *For 967844201-00*	1	-
12	539132859	HEAT SHIELD -	1	-
13	587990501	CAP -	2	-
14	593634302	STOP *For all EXCEPT 967844201-00*	2	-
14	505256401	STOP *For 967844201-00*	2	-
15	539102587	ABSORBER -	7	-
16	539105974	GROMMET -	1	-
17	522801401	BUMPER *For 967844201-00*	2	-
17	874490644	BOLT	2	-

Ref.	Article N.	Description	Qty	Kit
		For 967844201-00		
18	539104411	KNOB -	1	-
19	539200715	PIN *For 967844201-00*	2	-
19	874490512	BOLT *For 967844201-00*	1	-
20	539133006	BOLT *For 967844201-00*	2	-
20	574388001	PIN *For 967844201-00*	2	-
21	539104763	CLIP *For 967844201-00*	5	-
22	539133006	BOLT *For 967844201-00*	2	-
22	525544001	BOLT *For 967844201-00*	1	-
23	874490644	BOLT *For 967844201-00*	2	-
23	539102335	BOLT *For 967844201-00*	2	-
24	874490512	BOLT *For 967844201-00*	18	-
24	539109117	BOLT *For all EXCEPT 967844201-00*	2	-
25	872140508	BOLT *For all EXCEPT 967844201-00*	3	-
25	874490560	BOLT *For 967844201-00*	4	-
26	525544001	BOLT *For 967844201-00*	1	-
26	872110606	BOLT *For all EXCEPT 967844201-00*	6	-
27	539102335	BOLT *For 967844201-00*	2	-
27	539200282	NUT *For 967844201-00*	6	-
28	874490560	BOLT *For 967844201-00*	4	-
28	580754601	BOLT *For 967844201-00*	6	-
29	872140506	BOLT *For 967844201-00*	6	-

Ref.	Article N.	Description	Qty	Kit
29	521996501	NUT *For all EXCEPT 967844201-00*	2	-
30	539990208	SCREW *For 967844201-00*	3	-
30	539112899	NUT, 5/16-18, NYLOC *For all EXCEPT 967844201-00*	12	-
31	539990645	BOLT -	2	-
32	539990316	BOLT *For 967844201-00*	4	-
32	819111116	WASHER *For all EXCEPT 967844201-00*	2	-
33	539200282	NUT *For 967844201-00*	6	-
33	539990250	WASHER *For all EXCEPT 967844201-00*	1	-
34	521996501	NUT *For all EXCEPT 967844201-00*	2	-
35	539112899	NUT, 5/16-18, NYLOC *For all EXCEPT 967844201-00*	13	-
36	525829101	NUT -	6	-
37	539976978	NUT *For 967844201-00*	2	-
37	873800400	NUT *For all EXCEPT 967844201-00*	4	-
38	819111116	WASHER *For all EXCEPT 967844201-00*	2	-
39	539990250	WASHER *For all EXCEPT 967844201-00*	1	-
40	819132416	WASHER -	2	-
41	539102653	WASHER *For 967844201-00*	4	-
42	539104763	CLIP *For 967844201-00*	8	-
43	539102653	WASHER *For 967844201-00*	4	-
62	575274801	KIT *For 967844201-00, NOT SHOWN PROTECTION FRAME*	1	-
1	586670402	PLATE	1	-
2	539976688	PULLEY	1	-
3	532175820	PULLEY	1	-

Ref.	Article N.	Description	Qty	Kit
4	510041603	ARM	1	-
5	574870901	DRIVE BELT	1	-
6	584994202	SHIELD	2	-
7	539102587	ABSORBER	2	-
8	510206301	PIVOT	1	-
9	525435601	PIVOT	1	-
10	539104763	CLIP	4	-
11	510254501	SHIELD	2	-
12	539114662	SHIELD, DUST	1	-
13	510254401	SPRING	1	-
14	872140610	BOLT	1	-
15	539130235	RHSNB 3/8-16 X 2.75 GR5 ZD	1	-
16	874490632	SCREW	1	-
17	874490512	BOLT	3	-
18	592858702	BOLT	9	-
19	874780852	BOLT	1	-
20	521991101	NUT	1	-
21	521996501	NUT	2	-
22	539112899	NUT, 5/16-18, NYLOC	5	-
23	539200282	NUT	4	-
24	539990613	NUT	1	-
25	539115528	1/2` CONTACT BELLSPR	1	-
26	819182212	WASHER	2	-
27	819141614	WASHER	1	-
28	539109562	WASHER	1	-
31	539111897	WASHER	1	-
1	574569101	TRANSMISSION *LEFT*	1	-
2	574569102	TRANSMISSION *RIGHT*	1	-
3	593278902	BRACKET *For 967177008-01, 967045501-00, 967844201-00*	1	-
3	575017102	BRACKET *For 967177007-01*	1	-
4	593279002	BRACKET *For 967177008-01, 967045501-00, 967844201-00*	1	-
4	575017002	BRACKET *For 967177007-01*	1	-
5	539131616	LINKAGE. LEFT BYPASS	1	-
6	539131618	LINKAGE	1	-

Ref.	Article N.	Description	Qty	Kit
7	574892101	HOSE ASSY	2	-
8	586067501	HOSE	1	-
9	585318201	TANK	1	-
10	584994202	SHIELD	2	-
11	539113466	OIL FILTER	2	-
12	530095646	FUEL FILTER	1	-
13	586072701	CAP	1	-
14	539976988	PIN	2	-
15	539102587	ABSORBER	2	-
16	539976988	PIN	2	-
17	539990643	BOLT	1	-
18	592858702	BOLT	9	-
19	539101721	SCREW *For 967177007-01*	4	-
19	539976978	NUT *For 967177008-01, 967045501-00, 967844201-00*	4	-
20	539112899	NUT, 5/16-18, NYLOC	2	-
21	574233801	SCREW	4	-
22	539990118	WASHER	4	-
23	539112899	NUT, 5/16-18, NYLOC	8	-
24	596204101	WASHER	2	-
25	539990118	WASHER	2	-
26	539990187	WASHER	4	-
27	539990055	WASHER	4	-
28	539990122	WASHER	2	-
1	585722303	FUEL TANK ASSY	1	-
2	539107593	CONSOLE	1	-
3	539102436	BATTERY	1	-
4	588107201	BRACKET *For 967045501-00, 967844201-00*	1	-
4	593634404	BRACKET *For 967177008-01*	1	-
4	510030001	BRACKET *For 967177007-01*	1	-
5	588030801	CABLE	1	-
6	588030701	CABLE	1	-
7	574841204	PLATE *For 967177007-01, 967045501-00, 967844201-00*	1	-
7	592877402	PLATE *For 967177008-01*	1	-

Ref.	Article N.	Description	Qty	Kit
8	582107602	SWITCH *For 967177007-01, 967177008-01, 967844201-00*	1	-
8	539131627	SWITCH *For 967045501-00*	1	-
9	574455401	SWITCH	1	-
10	581878301	LIGHT *For 967045501-00*	1	-
10	584971801	CHOKE *For 967844201-00*	1	-
10	574206903	CABLE *For 967177007-01, 967177008-01*	1	-
11	539102732	THROTTLE *For 967045501-00, 967844201-00*	1	-
11	539112438	THROTTLE CABLE *For 967177007-01, 967177008-01*	1	-
12	539133049	KNOB	1	-
13	586123901	FUEL HOSE *For 967177007-01, 967045501-00*	1	-
13	586123903	FUEL HOSE *For 967177008-01, 967844201-00*	1	-
14	576469201	FITTING	1	-
15	575018101	CAP	1	-
16	576618101	TANK VENT	1	-
17	539916325	VALVE *For 967844201-00*	1	-
18	576618201	GROMMET	1	-
19	539105245	GROMMET	1	-
20	539103178	NUT CAP	1	-
21	575436501	CLAMP	2	-
22	532123487	HOSE CLAMP *For 967844201-00*	4	-
23	587044810	HOSE *For 967844201-00*	2	-
24	587044539	HOSE *For 967045501-00*	1	-
24	587044536	HOSE *For 967177008-01, CUT TO LENGTH*	1	-
24	587044555	HOSE *For 967844201-00*	1	-
24	587044564	HOSE *For 967177007-01, CUT TO FIT*	1	-
25	574455501	KEY	1	-

Ref.	Article N.	Description	Qty	Kit
26	586161801	HOUR METER	1	-
28	582484201	SCREW	6	-
29	588843202	SUPPORT *For 967177008-01, 967844201-00*	2	-
29	539131671	SUPPORT *For 967177007-01, 967045501-00*	2	-
30	510064001	HOOK	2	-
31	532435395	TERMINAL COVER	1	-
32	539976934	SCREW *For 967177008-01, 967844201-00*	2	-
32	874780512	SCREW *For 967177007-01, 967045501-00*	2	-
33	872140506	BOLT *For 967177007-01, 967045501-00*	2	-
33	539990316	BOLT *For 967177008-01, 967844201-00*	2	-
34	539990411	SCREW *For 967045501-00, 967844201-00*	6	-
34	817490516	SCREW *For 967045501-00, 967844201-00*	3	-
35	539990411	SCREW *For 967045501-00, 967844201-00*	6	-
35	817490516	SCREW *For 967045501-00, 967844201-00*	3	-
36	539976977	NUT	2	-
37	539990997	NUT	2	-
38	539112899	NUT, 5/16-18, NYLOC	13	-
39	819070818	WASHER	4	-
40	819111116	WASHER	2	-
41	539990187	WASHER	2	-
42	532197802	SWITCH *For 967177008-01, 967177007-01*	1	-
42	539113792	SWITCH *For 967045501-00*	1	-
43	532109553	SWITCH *For 967177007-01, 967177008-01, 967045501-00*	2	-
44	581223001	PLATE *For 967177007-01, 967177008-01, 967045501-00*	2	-
45	574822701	SCREW *For 967177007-01, 967177008-01, 967045501-00*	4	-
63	589669901	HARNESS *For 967177007-01, 967844201-00*	1	-

Ref.	Article N.	Description	Qty	Kit
64	532409615	HARNESS *For 967177007-01, 967844201-00*	1	-
65	501279301	HARNESS *For 967045501-00*	1	-
66	900000002	DUMMY PART *For 967177008-01, 589 66 99-02 Harness w/Brake Switch*	1	-
1	581505401	DECK -	1	-
2	539104335	DRIVE BELT -	1	-
3	539113312	BLADE -	3	-
4	539131898	SPINDLE -	3	-
5	539103427	BUSHING -	1	-
6	539112169	BLADE BUSHING -	2	-
7	589766101	PULLEY -	3	-
8	539113300	PULLEY -	3	-
9	539112198	ARM -	1	-
10	539113319	SHIELD -	1	-
11	539113322	SHIELD -	1	-
12	584859402	BRACKET -	2	-
13	584859404	BRACKET -	2	-
14	539130901	CHUTE -	1	-
15	539113317	PLATE -	1	-
16	585323901	BEARING *For 967177008-01, 967045501-00*	3	-
16	532110485	BEARING *For 967177007-01, 967844201-00*	3	-
17	539103256	SPRING -	1	-
18	581606106	BRACKET	1	-

Ref.	Article N.	Description	Qty	Kit
		For 967844201-00		
18	581606102	BRACKET *For 967177007-01, 967177008-01, 967045501-00, ORG*	1	-
19	539130917	BRACKET -	1	-
20	532176066	ROLLER -	1	-
21	532179127	PIN -	1	-
22	539131859	PIN -	2	-
23	532133957	WHEEL -	2	-
24	539976998	NIPPLE -	1	-
25	876020412	SPLIT PIN -	2	-
26	581606102	BRACKET *For 967177007-01, 967177008-01, 967045501-00, ORG*	1	-
26	592964402	BRACKET *For 967177007-01, 967177008-01, 967045501-00*	1	-
27	532187291	SHAFT -	3	-
28	539104763	CLIP *For 967844201-00*	8	-
28	874780648	BOLT *For 967177007-01, 967177008-01, 967045501-00*	2	-
29	539108396	BOLT -	2	-
30	539990563	SCREW -	2	-
31	539976934	SCREW -	8	-
32	539990582	SCREW -	1	-
33	539103433	SCREW *For 967177007-01, 967844201-00*	1	-
33	589343201	MANDREL *For 967177008-01, 967045501-00*	1	-
34	874780520	BOLT -	2	-
35	539990799	BOLT -	3	-

Ref.	Article N.	Description	Qty	Kit
36	872110508	BOLT *For 967177007-01*	2	-
36	539107271	SCREW *For 967177008-01, 967045501-00, 967844201-00*	2	-
37	539100472	SCREW -	2	-
38	539102933	SCREW -	2	-
39	532193003	SCREW -	3	-
40	532137644	SCREW -	2	-
41	584953901	BOLT -	12	-
42	874780648	BOLT *For 967177007-01, 967177008-01, 967045501-00*	2	-
42	532400234	NUT *For 967177007-01, 967177008-01, 967045501-00*	3	-
43	539990717	NUT -	3	-
44	539990196	NUT -	2	-
45	539976979	NUT -	6	-
46	539101331	NUT *For 967177007-01*	1	-
46	873800800	NUT *For 967177008-01, 967045501-00, 967844201-00*	1	-
47	539112899	NUT, 5/16-18, NYLOC -	8	-
48	596134801	HEXAGON NUT -	3	-
49	539106504	WASHER -	2	-
50	819121414	WASHER *For 967844201-00*	10	-
50	539990692	WASHER *For 967177007-01, 967177008-01, 967045501-00*	11	-
51	539109600	WASHER -	8	-
52	539102243	WASHER -	1	-
53	539990550	WASHER	1	-

Ref.	Article N.	Description	Qty	Kit
		For 967177007-01		
53	819182212	WASHER *For 967177008-01, 967045501-00, 967844201-00*	1	-
54	532187690	WASHER -	3	-
55	819141614	WASHER -	3	-
1	510408301	PEDAL -	1	-
2	539110808	CROSS LINK -	2	-
3	586701701	SPACER -	2	-
4	539131861	SPACER. .3 -	1	-
5	586928702	LIFT -	1	-
6	584392702	PLATE -	2	-
7	539131897	BELLCRANK -	1	-
8	539131853	BELLCRANK -	1	-
9	588812102	BRACKET -	1	-
10	588812002	BRACKET -	1	-
11	539131566	LATCH -	1	-
12	539105059	ROPE -	1	-
13	539131791	MOUNT -	1	-
14	532195161	STUD -	4	-
15	539131792	SPRING -	1	-
16	539112896	BOLT -	1	-
17	539102642	SPRING -	1	-
18	539132734	SPRING. TORSION -	1	-

Ref.	Article N.	Description	Qty	Kit
19	539131850	HEIGHT. ADJUST. DECK -	1	-
20	539131860	PIVOT. LATCH. TRANSPORT -	1	-
21	539104808	SUPPORT -	4	-
22	539132182	PIN -	1	-
23	539132851	GRIP -	1	-
24	539115501	COTTER -	4	-
25	532194209	SPRING -	2	-
26	874780648	BOLT -	1	-
27	539990646	BOLT -	1	-
28	874780544	BOLT -	4	-
29	539108181	HCS 1/2-13 X 1-3/4 GR 8 ZD -	2	-
30	539990563	SCREW -	4	-
31	539112899	NUT, 5/16-18, NYLOC -	5	-
32	539976979	NUT -	4	-
33	873800800	NUT -	2	-
34	873900500	NUT -	2	-
35	539200282	NUT -	2	-
36	873900600	NUT -	4	-
37	819141614	WASHER -	1	-
38	539115528	1/2` CONTACT BELLSPR -	1	-
39	539109554	WASHER -	2	-
40	819191912	WASHER	2	-

Ref.	Article N.	Description	Qty	Kit
		-		
41	539991043	BUSHING -	10	-
1	510408301	PEDAL -	1	-
2	539110808	CROSS LINK -	2	-
3	586701701	SPACER -	2	-
4	539131861	SPACER. .3 -	1	-
5	586928702	LIFT -	1	-
6	584392702	PLATE -	2	-
7	539131897	BELLCRANK -	1	-
8	539131853	BELLCRANK -	1	-
9	539112223	STRUT -	2	-
10	539109693	LIFT CHAIN - 3 LINK -	4	-
11	539131566	LATCH -	1	-
12	539105059	ROPE -	1	-
13	539991043	BUSHING *For 967177007-01*	10	-
13	819211616	WASHER *For 967177008-01, 967045501-00*	1	-
14	539132017	MOUNT -	2	-
15	532194209	SPRING *For 967177008-01, 967045501-00*	1	-
16	539112896	BOLT -	1	-
17	539102642	SPRING *For 967177007-01*	1	-
17	539131790	SPRING *For 967177008-01, 967045501-00*	1	-
18	539132734	SPRING. TORSION -	1	-

Ref.	Article N.	Description	Qty	Kit
19	539131850	HEIGHT. ADJUST. DECK -	1	-
20	539131860	PIVOT. LATCH. TRANSPORT -	1	-
21	539104808	SUPPORT -	4	-
22	539132182	PIN -	1	-
24	539132851	GRIP -	1	-
25	539115501	COTTER -	6	-
26	874780544	BOLT *For 967177008-01, 967045501-00*	4	-
26	539101721	SCREW *For 967177007-01*	4	-
27	539108181	HCS 1/2-13 X 1-3/4 GR 8 ZD -	2	-
28	539976941	SCREW -	4	-
29	539101175	SCREW -	4	-
30	874780648	BOLT -	1	-
31	539990646	BOLT -	1	-
32	539108073	BOLT -	4	-
33	539200282	NUT -	2	-
34	539132019	NUT -	8	-
35	539102582	NUT -	8	-
36	539112899	NUT, 5/16-18, NYLOC *For 967177007-01*	5	-
37	539976979	NUT -	4	-
38	539101331	NUT *For 967177007-01*	1	-
38	873800800	NUT *For 967177008-01, 967045501-00*	1	-
39	819141614	WASHER	1	-

Ref.	Article N.	Description	Qty	Kit
		-		
40	539115528	1/2` CONTACT BELLSPR -	2	-
41	539109554	WASHER *For 967177007-01*	2	-
41	819182212	WASHER *For 967177008-01, 967045501-00*	2	-
42	539112899	NUT, 5/16-18, NYLOC *For 967177007-01*	5	-
43	539131791	MOUNT *For 967177007-01*	1	-
44	539131792	SPRING *For 967177007-01*	1	-
1	539132151	ARM -	1	-
2	539105036	GRIP -	1	-
3	575229602	BRACKET -	1	-
4	575229702	BRACKET -	1	-
5	586738802	LEVER -	1	-
6	575230201	SPRING -	2	-
7	575230301	SPRING -	2	-
8	586830002	MOUNT -	1	-
9	539132154	ACTUATOR -	1	-
10	539132153	BELLCRANK -	2	-
11	539132424	LINKAGE. BRAKE -	1	-
12	575229802	BRACKET -	2	-
13	539132161	BLADE BUSHING -	4	-
14	539104763	CLIP -	3	-
15	582121801	CABLE ASSY -	1	-

Ref.	Article N.	Description	Qty	Kit
16	582122001	CABLE ASSY -	2	-
17	505280001	TIE WRAP -	2	-
18	539990643	BOLT -	4	-
19	539108396	BOLT -	1	-
20	539990563	SCREW -	2	-
21	539990209	SCREW -	1	-
22	539110303	BOLT -	2	-
23	539990645	BOLT -	2	-
24	539990316	BOLT -	1	-
25	539131780	BOLT -	1	-
26	874490512	BOLT -	1	-
27	539112899	NUT, 5/16-18, NYLOC -	2	-
28	539990585	NUT -	5	-
29	539990717	NUT -	1	-
30	521996501	NUT -	2	-
31	539115617	NUT -	2	-
32	539200282	NUT -	2	-
33	539976978	NUT -	4	-
34	539107897	NUT -	2	-
35	539990055	WASHER -	8	-
36	539133007	WASHER -	1	-
37	539990122	WASHER	2	-

Ref.	Article N.	Description	Qty	Kit
		-		
38	819182212	WASHER -	1	-
39	532197802	SWITCH -	1	-
1	593564002	ARM -	1	-
2	539105036	GRIP -	1	-
3	593279202	BRACKET -	1	-
4	593279902	BRACKET -	1	-
5	590337701	GEAR -	1	-
6	575230201	SPRING -	2	-
7	575230301	SPRING -	2	-
8	590631502	MOUNT -	1	-
9	590204501	GEAR -	1	-
10	539990196	NUT -	2	-
11	596018303	BRACKET -	6	-
12	539104763	CLIP -	3	-
13	582121801	CABLE ASSY -	1	-
14	582122001	CABLE ASSY -	1	-
15	582121801	CABLE ASSY -	2	-
16	582122001	CABLE ASSY -	1	-
17	596018303	BRACKET -	1	-
18	593239802	ACTUATOR -	1	-
19	539990643	BOLT -	4	-

Ref.	Article N.	Description	Qty	Kit
20	539108396	BOLT -	1	-
21	525544001	BOLT -	3	-
22	539110303	BOLT -	2	-
23	539990645	BOLT -	2	-
24	539990316	BOLT -	1	-
25	539131780	BOLT -	1	-
26	874490512	BOLT -	1	-
27	525544001	BOLT -	1	-
28	539112899	NUT, 5/16-18, NYLOC -	1	-
29	539990585	NUT -	2	-
30	539990717	NUT -	1	-
31	521996501	NUT -	2	-
32	539115617	NUT -	2	-
33	539200282	NUT -	3	-
34	539976978	NUT -	4	-
35	539107897	NUT -	2	-
36	539990196	NUT -	2	-
37	539990055	WASHER -	8	-
38	819182212	WASHER -	1	-
39	539990122	WASHER -	2	-
40	819182212	WASHER -	1	-
41	595846701	BRAKE ASSY	1	-

Ref.	Article N.	Description	Qty	Kit
		NOT SHOWN		
1	501580402	SEAT -	1	-
2	539130359	BELT -	1	-
3	539103247	WIRE -	1	-
4	501762102	SUPPORT -	1	-
5	584916802	MOUNT -	2	-
6	587613301	SPRING -	2	-
7	539104763	CLIP -	8	-
8	539130793	STOP -	1	-
9	539119741	SWITCH -	1	-
10	584809102	SUPPORT -	1	-
11	584990102	SUPPORT -	1	-
12	584990202	SUPPORT -	1	-
13	539105974	GROMMET -	1	-
14	874490512	BOLT -	2	-
15	525544001	BOLT -	4	-
16	874490560	BOLT -	2	-
17	539990645	BOLT -	3	-
18	539115620	1/4-20X3/4 CARR BLT -	1	-
19	539130896	BOLT -	2	-
20	539112034	BOLT *For 967844201-00*	2	-
20	539124775	SCREW *For 967177007-01, 967177008-01, 967045501-00*	2	-

Ref.	Article N.	Description	Qty	Kit
21	872050506	BOLT *For 967844201-00*	2	-
22	539112899	NUT, 5/16-18, NYLOC -	9	-
23	539976979	NUT -	2	-
24	539990394	NUT -	2	-
25	539976978	NUT -	1	-
26	819141614	WASHER *For 967177007-01, 967177008-01, 967045501-00*	4	-
26	819091216	WASHER *For 967177007-01, 967177008-01, 967045501-00*	1	-
27	819141614	WASHER *For 967177007-01, 967177008-01, 967045501-00*	4	-
27	819091216	WASHER *For 967177007-01, 967177008-01, 967045501-00*	1	-
28	521996501	NUT *For 967177007-01, 967177008-01, 967045501-00*	1	-
29	873800500	LOCK NUT *For 967177007-01, 967177008-01, 967045501-00*	1	-
1	590090803	TUBE	1	-
2	590090804	TUBE	1	-
3	532109553	SWITCH	2	-
4	585124705	BRACKET	2	-
5	539438282	BEARING *For 967177007-01, 967177008-01, 967045501-00*	4	-
5	532438282	BEARING UNIT *For 967844201-00*	4	-
6	587187701	CONTROL	2	-
7	577420001	LEVER	2	-
8	584927201	SPACER	2	-
9	539102720	GAS SPRING	2	-
10	581437501	BLOCK	2	-
11	539102845	SPRING	2	-
12	576850301	SPRING	1	-
13	539131799	KNOB	1	-
14	574811401	ROD	2	-
15	539116689	ROD END COUPLER	2	-
16	588692502	ROD	2	-

Ref.	Article N.	Description	Qty	Kit
17	579764601	JOINT	2	-
18	581223001	PLATE *For 967844201-00*	2	-
19	576850402	SCREW *For 967177007-01, 967177008-01, 967045501-00*	2	-
19	539990585	NUT *For 967177007-01, 967177008-01, 967045501-00*	4	-
20	574822701	SCREW *For 967844201-00*	4	-
21	874780844	BOLT *For 967177007-01, 967177008-01, 967045501-00*	2	-
21	596580801	BOLT *NOTE: If you order 596580801 you will need to also order key 30 532423063 in the same quantity.*	1	-
22	874780844	BOLT *For 967177007-01, 967177008-01, 967045501-00*	2	-
22	539976935	SCREW *For 967177007-01, 967177008-01, 967045501-00*	4	-
23	539976935	SCREW *For 967177007-01, 967177008-01, 967045501-00*	4	-
23	525544001	BOLT *For 967177007-01, 967177008-01, 967045501-00*	4	-
24	525544001	BOLT *For 967177007-01, 967177008-01, 967045501-00*	4	-
24	874490512	BOLT *For 967177007-01, 967177008-01, 967045501-00*	8	-
25	576850402	SCREW *For 967177007-01, 967177008-01, 967045501-00*	2	-
25	874490512	BOLT *For 967177007-01, 967177008-01, 967045501-00*	8	-
26	539991073	NUT	2	-
27	539990585	NUT *For 967177007-01, 967177008-01, 967045501-00*	4	-
28	539990717	NUT *For 967177007-01, 967177008-01, 967045501-00*	6	-
28	539108010	NUT *For 967177007-01, 967177008-01, 967045501-00*	2	-
29	539990717	NUT *For 967177007-01, 967177008-01, 967045501-00*	4	-
29	539112899	NUT, 5/16-18, NYLOC *For 967177007-01, 967177008-01, 967045501-00*	10	-
30	819111116	WASHER *For 967177007-01, 967177008-01, 967045501-00*	12	-

Ref.	Article N.	Description	Qty	Kit
30	532423063	WASHER *NOTE: If you order 532423063 you will need to also order key 30 596580801 in the same quantity.*	1	-
31	539990223	NUT	4	-
32	819111116	WASHER *For 967177007-01, 967177008-01, 967045501-00*	14	-
33	539130894	GRIP *For 967177007-01, 967177008-01, 967045501-00*	2	-
34	874780520	BOLT *For 967177007-01, 967177008-01, 967045501-00*	5	-
35	539108010	NUT *For 967177007-01, 967177008-01, 967045501-00*	2	-
36	595305701	SCREW	2	-
1	586955401	WHEEL ASSY -	2	-
2	581199501	WHEEL ASSY -	2	-
3	582746401	TIRE -	2	-
3	539102543	BEARING -	4	-
4	539102535	CAP -	2	-
5	586921902	FORK -	2	-
6	539102851	SEALING -	2	-
7	575334901	SPACER -	2	-
8	539101474	NIPPLE -	2	-
9	539102889	SPLIT PIN -	2	-
10	539105517	BOLT -	2	-
11	539102852	NUT -	2	-
12	521991101	NUT -	2	-
13	587653902	NUT -	8	-
14	819182212	WASHER -	2	-

WHEELS AND TIRES

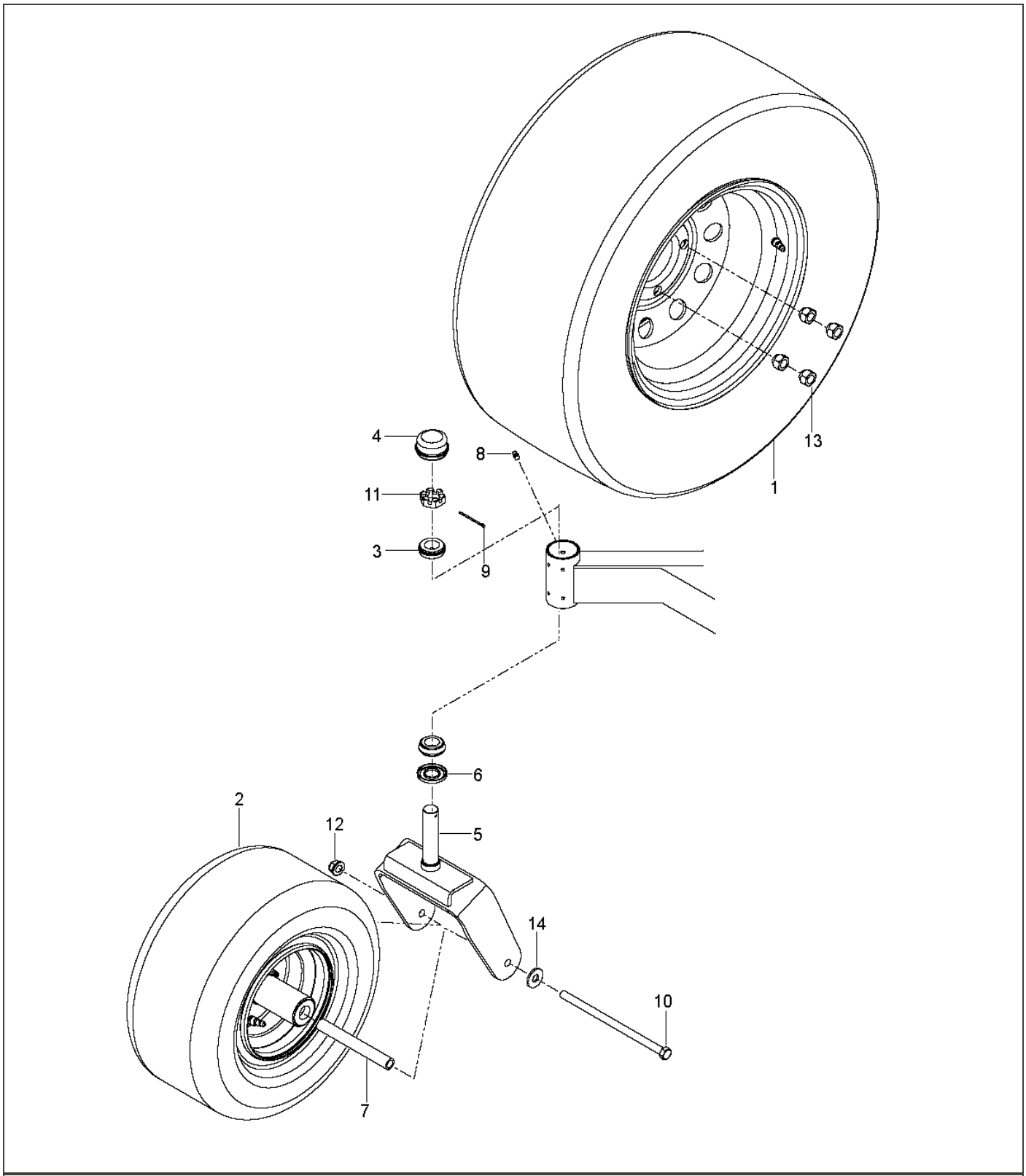

Ref.	Article N.	Description	Qty	Kit
1	586651402	PLATE -	1	-
2	574811001	PULLEY	1	-

Ref.	Article N.	Description	Qty	Kit
		-		
3	582042801	SOLENOID -	1	-
4	539101363	CLAMP -	1	-
5	584825501	HOSE ASSY -	1	-
6	575229902	BRACKET -	1	-
7	539102757	CABLE -	1	-
8	574607001	CLUTCH -	1	-
9	575017301	STOP -	1	-
10	539131604	MUFFLER ASSY -	1	-
11	583954501	TUBE -	1	-
12	583954801	TUBE -	1	-
13	586839701	GASKET -	2	-
14	532131563	COVER -	2	-
15	539102759	INSULATOR -	1	-
16	539912757	KEY -	1	-
17	539990071	BOLT -	1	-
18	817120616	SCREW -	4	-
19	539107271	SCREW -	2	-
20	874490512	BOLT -	8	-
21	581332802	BOLT -	1	-
22	539990302	HWST 1/4C X 3/8 -	1	-
23	539107475	BOLT -	2	-

Ref.	Article N.	Description	Qty	Kit
24	539108120	NUT -	4	-
25	539112899	NUT, 5/16-18, NYLOC -	10	-
26	539990053	WASHER -	1	-
27	539990247	WASHER -	1	-
1	586651402	PLATE	1	-
2	574846402	PLATE *For 967177008-01*	1	-
2	586670402	PLATE *For 967177007-01, 967045501-00*	1	-
3	574811001	PULLEY	1	-
4	539976688	PULLEY	1	-
5	532175820	PULLEY	1	-
6	574870901	DRIVE BELT	1	-
7	525435601	PIVOT	1	-
8	510206301	PIVOT	1	-
9	510041603	ARM	1	-
10	574607001	CLUTCH	1	-
11	575017302	STOP	1	-
12	539102757	CABLE *For 967177007-01, 967177008-01*	1	-
13	576701801	MUFFLER *For 967177007-01*	1	-
13	525750201	MUFFLER *For 967177008-01*	1	-
13	501451201	MUFFLER ASSY *For 967045501-00*	1	-
14	582042801	SOLENOID *For 967177007-01, 967177008-01*	1	-
15	510254401	SPRING	1	-
16	539114662	SHIELD, DUST	1	-
17	510254501	SHIELD	2	-
18	579150901	SHIELD *For 967177007-01, 967177008-01*	1	-
19	584825501	HOSE ASSY *For 967177008-01, 967045501-00*	1	-
20	522599001	ADAPTER *For 967177008-01*	1	-

Ref.	Article N.	Description	Qty	Kit
21	539101363	CLAMP *For 967177008-01, 967045501-00*	1	-
22	522837001	PLUG *For 967177008-01*	1	-
22	585807101	PLUG *For 967045501-00*	1	-
23	539912757	KEY	1	-
24	586839701	GASKET *For 967177007-01, 967177008-01*	2	-
25	532131563	COVER *For 967177007-01*	1	-
25	539102759	INSULATOR *For 967177008-01*	2	-
26	532131563	COVER *For 967177007-01*	2	-
27	539104763	CLIP	4	-
28	539100413	BOLT *For 967177007-01*	1	-
28	872140610	BOLT *For 967177008-01, 967045501-00*	1	-
29	872140622	BOLT *For 967045501-00*	1	-
29	539130235	RHSNB 3/8-16 X 2.75 GR5 ZD *For 967177007-01, 967177008-01*	1	-
30	872110508	BOLT *For 967177008-01*	2	-
31	581332802	BOLT	1	-
32	539103433	SCREW *For 967177007-01*	1	-
32	874780852	BOLT *For 967177008-01, 967045501-00*	1	-
33	525866201	BOLT *For 967177007-01*	1	-
33	874490632	SCREW *For 967177008-01, 967045501-00*	1	-
34	874490512	BOLT	11	-
35	874780408	BOLT *For 967045501-00*	1	-
35	539990071	BOLT *For 967177008-01*	1	-
36	817120616	SCREW *For 967177007-01, 967045501-00*	4	-

Ref.	Article N.	Description	Qty	Kit
36	539990563	SCREW *For 967177008-01*	4	-
37	592858702	BOLT	8	-
38	817490406	SCREW *For 967177008-01*	1	-
38	539990302	HWST 1/4C X 3/8 *For 967177007-01*	1	-
39	539990613	NUT *For 967177007-01*	1	-
40	539112899	NUT, 5/16-18, NYLOC	15	-
41	521991101	NUT	1	-
42	539200282	NUT	4	-
43	521996501	NUT *For 967177008-01, 967045501-00*	2	-
44	539108120	NUT *For 967177007-01, 967177008-01*	4	-
45	539990053	WASHER	1	-
46	539115528	1/2` CONTACT BELLSPR	1	-
47	539990247	WASHER	1	-
48	539109562	WASHER	1	-
50	539109554	WASHER *For 967177007-01*	2	-
50	819182212	WASHER *For 967177008-01, 967045501-00*	2	-
51	539111897	WASHER	1	-
52	819141614	WASHER	1	-
53	539990118	WASHER *For 967177008-01, 967045501-00*	4	-
54	539990613	NUT *For 967177007-01*	1	-
54	521996501	NUT *For 967177008-01, 967045501-00*	2	-
55	532183906	SCREW *For 967177007-01*	4	-
55	532192334	SCREW *For 967045501-00*	4	-
91	501279301	HARNESS *For 967045501-00*	1	-
92	586839901	GASKET *For 967045501-00, NOT SHOWN*	2	-
93	587450101	HARNESS *For 967045501-00*	1	-

Ref.	Article N.	Description	Qty	Kit
94	574825801	KIT *For 967045501-00, SPARK ARRESTOR*	1	-
1	501656001	FRAME -	1	-
2	586893002	GUARD -	1	-
3	586867702	SUPPORT -	1	-
4	586560101	BRACKET -	1	-
5	586560201	BRACKET -	1	-
6	539132744	PLATE -	1	-
7	539132380	PLATE -	1	-
8	594037402	BRACKET *For all EXCEPT 967844201-00, BLK*	1	-
8	587048702	BRACKET *For 967844201-00*	1	-
9	575245202	BRACKET -	2	-
10	575533602	MOUNT -	2	-
11	900000002	DUMMY PART *For all EXCEPT 967844201-00, 593 79 55-05 Guard, Skid Gray*	1	-
11	575230402	SHIELD *For 967844201-00*	1	-
12	539132859	HEAT SHIELD -	1	-
13	587990501	CAP -	2	-
14	593634302	STOP *For all EXCEPT 967844201-00*	2	-
14	505256401	STOP *For 967844201-00*	2	-
15	539102587	ABSORBER -	7	-
16	539105974	GROMMET -	1	-
17	522801401	BUMPER *For 967844201-00*	2	-
17	874490644	BOLT	2	-

Ref.	Article N.	Description	Qty	Kit
		For 967844201-00		
18	539104411	KNOB -	1	-
19	539200715	PIN *For 967844201-00*	2	-
19	874490512	BOLT *For 967844201-00*	1	-
20	539133006	BOLT *For 967844201-00*	2	-
20	574388001	PIN *For 967844201-00*	2	-
21	539104763	CLIP *For 967844201-00*	5	-
22	539133006	BOLT *For 967844201-00*	2	-
22	525544001	BOLT *For 967844201-00*	1	-
23	874490644	BOLT *For 967844201-00*	2	-
23	539102335	BOLT *For 967844201-00*	2	-
24	874490512	BOLT *For 967844201-00*	18	-
24	539109117	BOLT *For all EXCEPT 967844201-00*	2	-
25	872140508	BOLT *For all EXCEPT 967844201-00*	3	-
25	874490560	BOLT *For 967844201-00*	4	-
26	525544001	BOLT *For 967844201-00*	1	-
26	872110606	BOLT *For all EXCEPT 967844201-00*	6	-
27	539102335	BOLT *For 967844201-00*	2	-
27	539200282	NUT *For 967844201-00*	6	-
28	874490560	BOLT *For 967844201-00*	4	-
28	580754601	BOLT *For 967844201-00*	6	-
29	872140506	BOLT *For 967844201-00*	6	-

Ref.	Article N.	Description	Qty	Kit
29	521996501	NUT *For all EXCEPT 967844201-00*	2	-
30	539990208	SCREW *For 967844201-00*	3	-
30	539112899	NUT, 5/16-18, NYLOC *For all EXCEPT 967844201-00*	12	-
31	539990645	BOLT -	2	-
32	539990316	BOLT *For 967844201-00*	4	-
32	819111116	WASHER *For all EXCEPT 967844201-00*	2	-
33	539200282	NUT *For 967844201-00*	6	-
33	539990250	WASHER *For all EXCEPT 967844201-00*	1	-
34	521996501	NUT *For all EXCEPT 967844201-00*	2	-
35	539112899	NUT, 5/16-18, NYLOC *For all EXCEPT 967844201-00*	13	-
36	525829101	NUT -	6	-
37	539976978	NUT *For 967844201-00*	2	-
37	873800400	NUT *For all EXCEPT 967844201-00*	4	-
38	819111116	WASHER *For all EXCEPT 967844201-00*	2	-
39	539990250	WASHER *For all EXCEPT 967844201-00*	1	-
40	819132416	WASHER -	2	-
41	539102653	WASHER *For 967844201-00*	4	-
42	539104763	CLIP *For 967844201-00*	8	-
43	539102653	WASHER *For 967844201-00*	4	-
62	575274801	KIT *For 967844201-00, NOT SHOWN PROTECTION FRAME*	1	-
1	586670402	PLATE	1	-
2	539976688	PULLEY	1	-
3	532175820	PULLEY	1	-

Ref.	Article N.	Description	Qty	Kit
4	510041603	ARM	1	-
5	574870901	DRIVE BELT	1	-
6	584994202	SHIELD	2	-
7	539102587	ABSORBER	2	-
8	510206301	PIVOT	1	-
9	525435601	PIVOT	1	-
10	539104763	CLIP	4	-
11	510254501	SHIELD	2	-
12	539114662	SHIELD, DUST	1	-
13	510254401	SPRING	1	-
14	872140610	BOLT	1	-
15	539130235	RHSNB 3/8-16 X 2.75 GR5 ZD	1	-
16	874490632	SCREW	1	-
17	874490512	BOLT	3	-
18	592858702	BOLT	9	-
19	874780852	BOLT	1	-
20	521991101	NUT	1	-
21	521996501	NUT	2	-
22	539112899	NUT, 5/16-18, NYLOC	5	-
23	539200282	NUT	4	-
24	539990613	NUT	1	-
25	539115528	1/2` CONTACT BELLSPR	1	-
26	819182212	WASHER	2	-
27	819141614	WASHER	1	-
28	539109562	WASHER	1	-
31	539111897	WASHER	1	-
1	574569101	TRANSMISSION *LEFT*	1	-
2	574569102	TRANSMISSION *RIGHT*	1	-
3	593278902	BRACKET *For 967177008-01, 967045501-00, 967844201-00*	1	-
3	575017102	BRACKET *For 967177007-01*	1	-
4	593279002	BRACKET *For 967177008-01, 967045501-00, 967844201-00*	1	-
4	575017002	BRACKET *For 967177007-01*	1	-
5	539131616	LINKAGE. LEFT BYPASS	1	-
6	539131618	LINKAGE	1	-

Ref.	Article N.	Description	Qty	Kit
7	574892101	HOSE ASSY	2	-
8	586067501	HOSE	1	-
9	585318201	TANK	1	-
10	584994202	SHIELD	2	-
11	539113466	OIL FILTER	2	-
12	530095646	FUEL FILTER	1	-
13	586072701	CAP	1	-
14	539976988	PIN	2	-
15	539102587	ABSORBER	2	-
16	539976988	PIN	2	-
17	539990643	BOLT	1	-
18	592858702	BOLT	9	-
19	539101721	SCREW *For 967177007-01*	4	-
19	539976978	NUT *For 967177008-01, 967045501-00, 967844201-00*	4	-
20	539112899	NUT, 5/16-18, NYLOC	2	-
21	574233801	SCREW	4	-
22	539990118	WASHER	4	-
23	539112899	NUT, 5/16-18, NYLOC	8	-
24	596204101	WASHER	2	-
25	539990118	WASHER	2	-
26	539990187	WASHER	4	-
27	539990055	WASHER	4	-
28	539990122	WASHER	2	-
1	585722303	FUEL TANK ASSY	1	-
2	539107593	CONSOLE	1	-
3	539102436	BATTERY	1	-
4	588107201	BRACKET *For 967045501-00, 967844201-00*	1	-
4	593634404	BRACKET *For 967177008-01*	1	-
4	510030001	BRACKET *For 967177007-01*	1	-
5	588030801	CABLE	1	-
6	588030701	CABLE	1	-
7	574841204	PLATE *For 967177007-01, 967045501-00, 967844201-00*	1	-
7	592877402	PLATE *For 967177008-01*	1	-

Ref.	Article N.	Description	Qty	Kit
8	582107602	SWITCH *For 967177007-01, 967177008-01, 967844201-00*	1	-
8	539131627	SWITCH *For 967045501-00*	1	-
9	574455401	SWITCH	1	-
10	581878301	LIGHT *For 967045501-00*	1	-
10	584971801	CHOKE *For 967844201-00*	1	-
10	574206903	CABLE *For 967177007-01, 967177008-01*	1	-
11	539102732	THROTTLE *For 967045501-00, 967844201-00*	1	-
11	539112438	THROTTLE CABLE *For 967177007-01, 967177008-01*	1	-
12	539133049	KNOB	1	-
13	586123901	FUEL HOSE *For 967177007-01, 967045501-00*	1	-
13	586123903	FUEL HOSE *For 967177008-01, 967844201-00*	1	-
14	576469201	FITTING	1	-
15	575018101	CAP	1	-
16	576618101	TANK VENT	1	-
17	539916325	VALVE *For 967844201-00*	1	-
18	576618201	GROMMET	1	-
19	539105245	GROMMET	1	-
20	539103178	NUT CAP	1	-
21	575436501	CLAMP	2	-
22	532123487	HOSE CLAMP *For 967844201-00*	4	-
23	587044810	HOSE *For 967844201-00*	2	-
24	587044539	HOSE *For 967045501-00*	1	-
24	587044536	HOSE *For 967177008-01, CUT TO LENGTH*	1	-
24	587044555	HOSE *For 967844201-00*	1	-
24	587044564	HOSE *For 967177007-01, CUT TO FIT*	1	-
25	574455501	KEY	1	-

Ref.	Article N.	Description	Qty	Kit
26	586161801	HOUR METER	1	-
28	582484201	SCREW	6	-
29	588843202	SUPPORT *For 967177008-01, 967844201-00*	2	-
29	539131671	SUPPORT *For 967177007-01, 967045501-00*	2	-
30	510064001	HOOK	2	-
31	532435395	TERMINAL COVER	1	-
32	539976934	SCREW *For 967177008-01, 967844201-00*	2	-
32	874780512	SCREW *For 967177007-01, 967045501-00*	2	-
33	872140506	BOLT *For 967177007-01, 967045501-00*	2	-
33	539990316	BOLT *For 967177008-01, 967844201-00*	2	-
34	539990411	SCREW *For 967045501-00, 967844201-00*	6	-
34	817490516	SCREW *For 967045501-00, 967844201-00*	3	-
35	539990411	SCREW *For 967045501-00, 967844201-00*	6	-
35	817490516	SCREW *For 967045501-00, 967844201-00*	3	-
36	539976977	NUT	2	-
37	539990997	NUT	2	-
38	539112899	NUT, 5/16-18, NYLOC	13	-
39	819070818	WASHER	4	-
40	819111116	WASHER	2	-
41	539990187	WASHER	2	-
42	532197802	SWITCH *For 967177008-01, 967177007-01*	1	-
42	539113792	SWITCH *For 967045501-00*	1	-
43	532109553	SWITCH *For 967177007-01, 967177008-01, 967045501-00*	2	-
44	581223001	PLATE *For 967177007-01, 967177008-01, 967045501-00*	2	-
45	574822701	SCREW *For 967177007-01, 967177008-01, 967045501-00*	4	-
63	589669901	HARNESS *For 967177007-01, 967844201-00*	1	-

Ref.	Article N.	Description	Qty	Kit
64	532409615	HARNESS *For 967177007-01, 967844201-00*	1	-
65	501279301	HARNESS *For 967045501-00*	1	-
66	900000002	DUMMY PART *For 967177008-01, 589 66 99-02 Harness w/Brake Switch*	1	-
1	581505401	DECK -	1	-
2	539104335	DRIVE BELT -	1	-
3	539113312	BLADE -	3	-
4	539131898	SPINDLE -	3	-
5	539103427	BUSHING -	1	-
6	539112169	BLADE BUSHING -	2	-
7	589766101	PULLEY -	3	-
8	539113300	PULLEY -	3	-
9	539112198	ARM -	1	-
10	539113319	SHIELD -	1	-
11	539113322	SHIELD -	1	-
12	584859402	BRACKET -	2	-
13	584859404	BRACKET -	2	-
14	539130901	CHUTE -	1	-
15	539113317	PLATE -	1	-
16	585323901	BEARING *For 967177008-01, 967045501-00*	3	-
16	532110485	BEARING *For 967177007-01, 967844201-00*	3	-
17	539103256	SPRING -	1	-
18	581606106	BRACKET	1	-

Ref.	Article N.	Description	Qty	Kit
		For 967844201-00		
18	581606102	BRACKET *For 967177007-01, 967177008-01, 967045501-00, ORG*	1	-
19	539130917	BRACKET -	1	-
20	532176066	ROLLER -	1	-
21	532179127	PIN -	1	-
22	539131859	PIN -	2	-
23	532133957	WHEEL -	2	-
24	539976998	NIPPLE -	1	-
25	876020412	SPLIT PIN -	2	-
26	581606102	BRACKET *For 967177007-01, 967177008-01, 967045501-00, ORG*	1	-
26	592964402	BRACKET *For 967177007-01, 967177008-01, 967045501-00*	1	-
27	532187291	SHAFT -	3	-
28	539104763	CLIP *For 967844201-00*	8	-
28	874780648	BOLT *For 967177007-01, 967177008-01, 967045501-00*	2	-
29	539108396	BOLT -	2	-
30	539990563	SCREW -	2	-
31	539976934	SCREW -	8	-
32	539990582	SCREW -	1	-
33	539103433	SCREW *For 967177007-01, 967844201-00*	1	-
33	589343201	MANDREL *For 967177008-01, 967045501-00*	1	-
34	874780520	BOLT -	2	-
35	539990799	BOLT -	3	-

Ref.	Article N.	Description	Qty	Kit
36	872110508	BOLT *For 967177007-01*	2	-
36	539107271	SCREW *For 967177008-01, 967045501-00, 967844201-00*	2	-
37	539100472	SCREW -	2	-
38	539102933	SCREW -	2	-
39	532193003	SCREW -	3	-
40	532137644	SCREW -	2	-
41	584953901	BOLT -	12	-
42	874780648	BOLT *For 967177007-01, 967177008-01, 967045501-00*	2	-
42	532400234	NUT *For 967177007-01, 967177008-01, 967045501-00*	3	-
43	539990717	NUT -	3	-
44	539990196	NUT -	2	-
45	539976979	NUT -	6	-
46	539101331	NUT *For 967177007-01*	1	-
46	873800800	NUT *For 967177008-01, 967045501-00, 967844201-00*	1	-
47	539112899	NUT, 5/16-18, NYLOC -	8	-
48	596134801	HEXAGON NUT -	3	-
49	539106504	WASHER -	2	-
50	819121414	WASHER *For 967844201-00*	10	-
50	539990692	WASHER *For 967177007-01, 967177008-01, 967045501-00*	11	-
51	539109600	WASHER -	8	-
52	539102243	WASHER -	1	-
53	539990550	WASHER	1	-

Ref.	Article N.	Description	Qty	Kit
		For 967177007-01		
53	819182212	WASHER *For 967177008-01, 967045501-00, 967844201-00*	1	-
54	532187690	WASHER -	3	-
55	819141614	WASHER -	3	-
1	510408301	PEDAL -	1	-
2	539110808	CROSS LINK -	2	-
3	586701701	SPACER -	2	-
4	539131861	SPACER. .3 -	1	-
5	586928702	LIFT -	1	-
6	584392702	PLATE -	2	-
7	539131897	BELLCRANK -	1	-
8	539131853	BELLCRANK -	1	-
9	588812102	BRACKET -	1	-
10	588812002	BRACKET -	1	-
11	539131566	LATCH -	1	-
12	539105059	ROPE -	1	-
13	539131791	MOUNT -	1	-
14	532195161	STUD -	4	-
15	539131792	SPRING -	1	-
16	539112896	BOLT -	1	-
17	539102642	SPRING -	1	-
18	539132734	SPRING. TORSION -	1	-

Ref.	Article N.	Description	Qty	Kit
19	539131850	HEIGHT. ADJUST. DECK -	1	-
20	539131860	PIVOT. LATCH. TRANSPORT -	1	-
21	539104808	SUPPORT -	4	-
22	539132182	PIN -	1	-
23	539132851	GRIP -	1	-
24	539115501	COTTER -	4	-
25	532194209	SPRING -	2	-
26	874780648	BOLT -	1	-
27	539990646	BOLT -	1	-
28	874780544	BOLT -	4	-
29	539108181	HCS 1/2-13 X 1-3/4 GR 8 ZD -	2	-
30	539990563	SCREW -	4	-
31	539112899	NUT, 5/16-18, NYLOC -	5	-
32	539976979	NUT -	4	-
33	873800800	NUT -	2	-
34	873900500	NUT -	2	-
35	539200282	NUT -	2	-
36	873900600	NUT -	4	-
37	819141614	WASHER -	1	-
38	539115528	1/2` CONTACT BELLSPR -	1	-
39	539109554	WASHER -	2	-
40	819191912	WASHER	2	-

Ref.	Article N.	Description	Qty	Kit
		-		
41	539991043	BUSHING -	10	-
1	510408301	PEDAL -	1	-
2	539110808	CROSS LINK -	2	-
3	586701701	SPACER -	2	-
4	539131861	SPACER. .3 -	1	-
5	586928702	LIFT -	1	-
6	584392702	PLATE -	2	-
7	539131897	BELLCRANK -	1	-
8	539131853	BELLCRANK -	1	-
9	539112223	STRUT -	2	-
10	539109693	LIFT CHAIN - 3 LINK -	4	-
11	539131566	LATCH -	1	-
12	539105059	ROPE -	1	-
13	539991043	BUSHING *For 967177007-01*	10	-
13	819211616	WASHER *For 967177008-01, 967045501-00*	1	-
14	539132017	MOUNT -	2	-
15	532194209	SPRING *For 967177008-01, 967045501-00*	1	-
16	539112896	BOLT -	1	-
17	539102642	SPRING *For 967177007-01*	1	-
17	539131790	SPRING *For 967177008-01, 967045501-00*	1	-
18	539132734	SPRING. TORSION -	1	-

Ref.	Article N.	Description	Qty	Kit
19	539131850	HEIGHT. ADJUST. DECK -	1	-
20	539131860	PIVOT. LATCH. TRANSPORT -	1	-
21	539104808	SUPPORT -	4	-
22	539132182	PIN -	1	-
24	539132851	GRIP -	1	-
25	539115501	COTTER -	6	-
26	874780544	BOLT *For 967177008-01, 967045501-00*	4	-
26	539101721	SCREW *For 967177007-01*	4	-
27	539108181	HCS 1/2-13 X 1-3/4 GR 8 ZD -	2	-
28	539976941	SCREW -	4	-
29	539101175	SCREW -	4	-
30	874780648	BOLT -	1	-
31	539990646	BOLT -	1	-
32	539108073	BOLT -	4	-
33	539200282	NUT -	2	-
34	539132019	NUT -	8	-
35	539102582	NUT -	8	-
36	539112899	NUT, 5/16-18, NYLOC *For 967177007-01*	5	-
37	539976979	NUT -	4	-
38	539101331	NUT *For 967177007-01*	1	-
38	873800800	NUT *For 967177008-01, 967045501-00*	1	-
39	819141614	WASHER	1	-

Ref.	Article N.	Description	Qty	Kit
		-		
40	539115528	1/2` CONTACT BELLSPR -	2	-
41	539109554	WASHER *For 967177007-01*	2	-
41	819182212	WASHER *For 967177008-01, 967045501-00*	2	-
42	539112899	NUT, 5/16-18, NYLOC *For 967177007-01*	5	-
43	539131791	MOUNT *For 967177007-01*	1	-
44	539131792	SPRING *For 967177007-01*	1	-
1	539132151	ARM -	1	-
2	539105036	GRIP -	1	-
3	575229602	BRACKET -	1	-
4	575229702	BRACKET -	1	-
5	586738802	LEVER -	1	-
6	575230201	SPRING -	2	-
7	575230301	SPRING -	2	-
8	586830002	MOUNT -	1	-
9	539132154	ACTUATOR -	1	-
10	539132153	BELLCRANK -	2	-
11	539132424	LINKAGE. BRAKE -	1	-
12	575229802	BRACKET -	2	-
13	539132161	BLADE BUSHING -	4	-
14	539104763	CLIP -	3	-
15	582121801	CABLE ASSY -	1	-

Ref.	Article N.	Description	Qty	Kit
16	582122001	CABLE ASSY -	2	-
17	505280001	TIE WRAP -	2	-
18	539990643	BOLT -	4	-
19	539108396	BOLT -	1	-
20	539990563	SCREW -	2	-
21	539990209	SCREW -	1	-
22	539110303	BOLT -	2	-
23	539990645	BOLT -	2	-
24	539990316	BOLT -	1	-
25	539131780	BOLT -	1	-
26	874490512	BOLT -	1	-
27	539112899	NUT, 5/16-18, NYLOC -	2	-
28	539990585	NUT -	5	-
29	539990717	NUT -	1	-
30	521996501	NUT -	2	-
31	539115617	NUT -	2	-
32	539200282	NUT -	2	-
33	539976978	NUT -	4	-
34	539107897	NUT -	2	-
35	539990055	WASHER -	8	-
36	539133007	WASHER -	1	-
37	539990122	WASHER	2	-

Ref.	Article N.	Description	Qty	Kit
		-		
38	819182212	WASHER -	1	-
39	532197802	SWITCH -	1	-
1	593564002	ARM -	1	-
2	539105036	GRIP -	1	-
3	593279202	BRACKET -	1	-
4	593279902	BRACKET -	1	-
5	590337701	GEAR -	1	-
6	575230201	SPRING -	2	-
7	575230301	SPRING -	2	-
8	590631502	MOUNT -	1	-
9	590204501	GEAR -	1	-
10	539990196	NUT -	2	-
11	596018303	BRACKET -	6	-
12	539104763	CLIP -	3	-
13	582121801	CABLE ASSY -	1	-
14	582122001	CABLE ASSY -	1	-
15	582121801	CABLE ASSY -	2	-
16	582122001	CABLE ASSY -	1	-
17	596018303	BRACKET -	1	-
18	593239802	ACTUATOR -	1	-
19	539990643	BOLT -	4	-

Ref.	Article N.	Description	Qty	Kit
20	539108396	BOLT -	1	-
21	525544001	BOLT -	3	-
22	539110303	BOLT -	2	-
23	539990645	BOLT -	2	-
24	539990316	BOLT -	1	-
25	539131780	BOLT -	1	-
26	874490512	BOLT -	1	-
27	525544001	BOLT -	1	-
28	539112899	NUT, 5/16-18, NYLOC -	1	-
29	539990585	NUT -	2	-
30	539990717	NUT -	1	-
31	521996501	NUT -	2	-
32	539115617	NUT -	2	-
33	539200282	NUT -	3	-
34	539976978	NUT -	4	-
35	539107897	NUT -	2	-
36	539990196	NUT -	2	-
37	539990055	WASHER -	8	-
38	819182212	WASHER -	1	-
39	539990122	WASHER -	2	-
40	819182212	WASHER -	1	-
41	595846701	BRAKE ASSY	1	-

Ref.	Article N.	Description	Qty	Kit
		NOT SHOWN		
1	501580402	SEAT -	1	-
2	539130359	BELT -	1	-
3	539103247	WIRE -	1	-
4	501762102	SUPPORT -	1	-
5	584916802	MOUNT -	2	-
6	587613301	SPRING -	2	-
7	539104763	CLIP -	8	-
8	539130793	STOP -	1	-
9	539119741	SWITCH -	1	-
10	584809102	SUPPORT -	1	-
11	584990102	SUPPORT -	1	-
12	584990202	SUPPORT -	1	-
13	539105974	GROMMET -	1	-
14	874490512	BOLT -	2	-
15	525544001	BOLT -	4	-
16	874490560	BOLT -	2	-
17	539990645	BOLT -	3	-
18	539115620	1/4-20X3/4 CARR BLT -	1	-
19	539130896	BOLT -	2	-
20	539112034	BOLT *For 967844201-00*	2	-
20	539124775	SCREW *For 967177007-01, 967177008-01, 967045501-00*	2	-

Ref.	Article N.	Description	Qty	Kit
21	872050506	BOLT *For 967844201-00*	2	-
22	539112899	NUT, 5/16-18, NYLOC -	9	-
23	539976979	NUT -	2	-
24	539990394	NUT -	2	-
25	539976978	NUT -	1	-
26	819141614	WASHER *For 967177007-01, 967177008-01, 967045501-00*	4	-
26	819091216	WASHER *For 967177007-01, 967177008-01, 967045501-00*	1	-
27	819141614	WASHER *For 967177007-01, 967177008-01, 967045501-00*	4	-
27	819091216	WASHER *For 967177007-01, 967177008-01, 967045501-00*	1	-
28	521996501	NUT *For 967177007-01, 967177008-01, 967045501-00*	1	-
29	873800500	LOCK NUT *For 967177007-01, 967177008-01, 967045501-00*	1	-
1	590090803	TUBE	1	-
2	590090804	TUBE	1	-
3	532109553	SWITCH	2	-
4	585124705	BRACKET	2	-
5	539438282	BEARING *For 967177007-01, 967177008-01, 967045501-00*	4	-
5	532438282	BEARING UNIT *For 967844201-00*	4	-
6	587187701	CONTROL	2	-
7	577420001	LEVER	2	-
8	584927201	SPACER	2	-
9	539102720	GAS SPRING	2	-
10	581437501	BLOCK	2	-
11	539102845	SPRING	2	-
12	576850301	SPRING	1	-
13	539131799	KNOB	1	-
14	574811401	ROD	2	-
15	539116689	ROD END COUPLER	2	-
16	588692502	ROD	2	-

Ref.	Article N.	Description	Qty	Kit
17	579764601	JOINT	2	-
18	581223001	PLATE *For 967844201-00*	2	-
19	576850402	SCREW *For 967177007-01, 967177008-01, 967045501-00*	2	-
19	539990585	NUT *For 967177007-01, 967177008-01, 967045501-00*	4	-
20	574822701	SCREW *For 967844201-00*	4	-
21	874780844	BOLT *For 967177007-01, 967177008-01, 967045501-00*	2	-
21	596580801	BOLT *NOTE: If you order 596580801 you will need to also order key 30 532423063 in the same quantity.*	1	-
22	874780844	BOLT *For 967177007-01, 967177008-01, 967045501-00*	2	-
22	539976935	SCREW *For 967177007-01, 967177008-01, 967045501-00*	4	-
23	539976935	SCREW *For 967177007-01, 967177008-01, 967045501-00*	4	-
23	525544001	BOLT *For 967177007-01, 967177008-01, 967045501-00*	4	-
24	525544001	BOLT *For 967177007-01, 967177008-01, 967045501-00*	4	-
24	874490512	BOLT *For 967177007-01, 967177008-01, 967045501-00*	8	-
25	576850402	SCREW *For 967177007-01, 967177008-01, 967045501-00*	2	-
25	874490512	BOLT *For 967177007-01, 967177008-01, 967045501-00*	8	-
26	539991073	NUT	2	-
27	539990585	NUT *For 967177007-01, 967177008-01, 967045501-00*	4	-
28	539990717	NUT *For 967177007-01, 967177008-01, 967045501-00*	6	-
28	539108010	NUT *For 967177007-01, 967177008-01, 967045501-00*	2	-
29	539990717	NUT *For 967177007-01, 967177008-01, 967045501-00*	4	-
29	539112899	NUT, 5/16-18, NYLOC *For 967177007-01, 967177008-01, 967045501-00*	10	-
30	819111116	WASHER *For 967177007-01, 967177008-01, 967045501-00*	12	-

Ref.	Article N.	Description	Qty	Kit
30	532423063	WASHER *NOTE: If you order 532423063 you will need to also order key 30 596580801 in the same quantity.*	1	-
31	539990223	NUT	4	-
32	819111116	WASHER *For 967177007-01, 967177008-01, 967045501-00*	14	-
33	539130894	GRIP *For 967177007-01, 967177008-01, 967045501-00*	2	-
34	874780520	BOLT *For 967177007-01, 967177008-01, 967045501-00*	5	-
35	539108010	NUT *For 967177007-01, 967177008-01, 967045501-00*	2	-
36	595305701	SCREW	2	-
1	586955401	WHEEL ASSY -	2	-
2	581199501	WHEEL ASSY -	2	-
3	582746401	TIRE -	2	-
3	539102543	BEARING -	4	-
4	539102535	CAP -	2	-
5	586921902	FORK -	2	-
6	539102851	SEALING -	2	-
7	575334901	SPACER -	2	-
8	539101474	NIPPLE -	2	-
9	539102889	SPLIT PIN -	2	-
10	539105517	BOLT -	2	-
11	539102852	NUT -	2	-
12	521991101	NUT -	2	-
13	587653902	NUT -	8	-
14	819182212	WASHER -	2	-