Product Catalog: Husqvarna/PZ 60 (Kawasaki 25.5 hp)

ENGINE MOUNTING, GUARDS AND MUFFLER

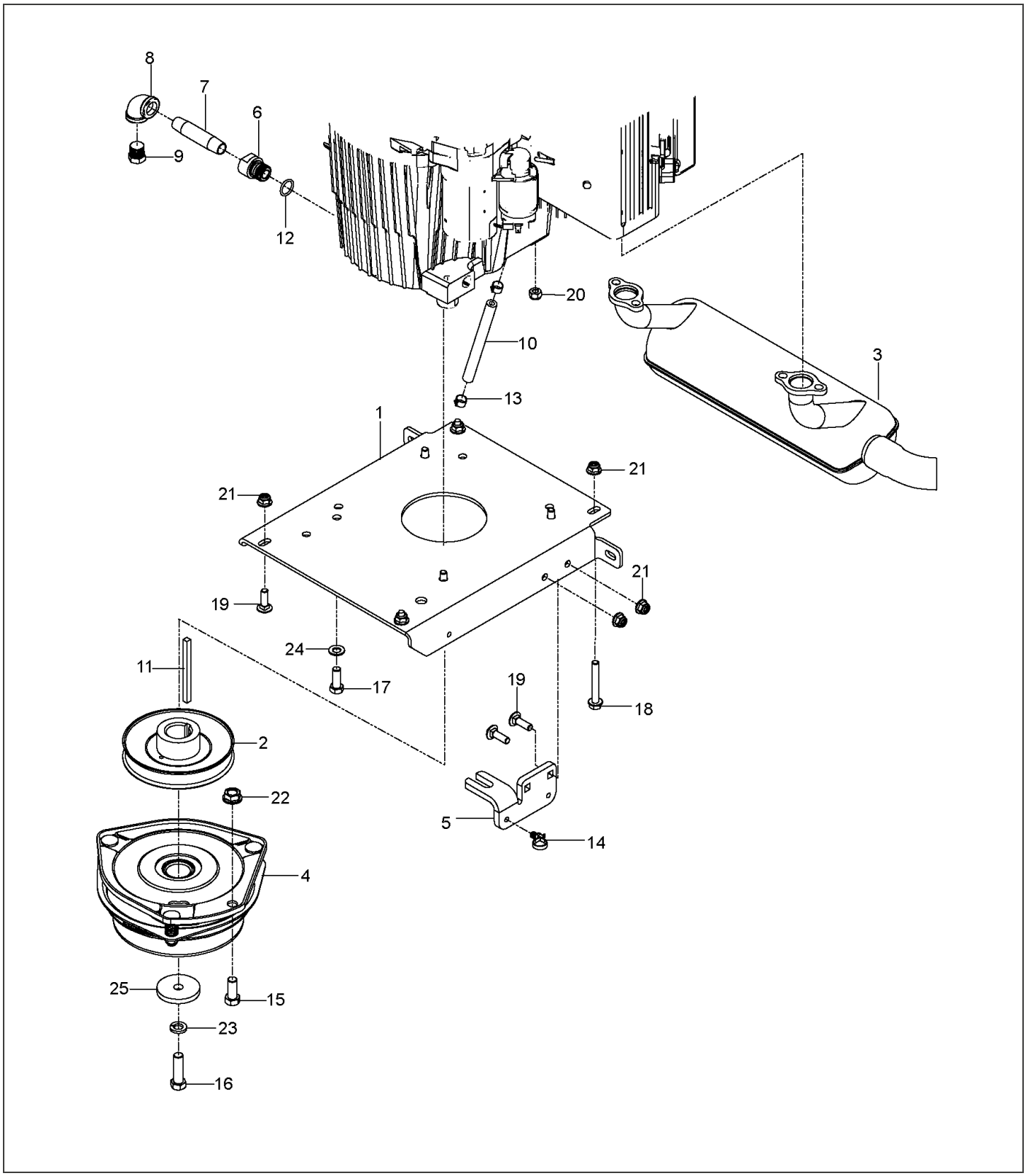

Ref.	Article N.	Description	Qty	Kit
1	510004602	PLATE -	1	-
2	510019801	PULLEY -	1	-
3	525750301	MUFFLER -	1	-
4	525749501	CLUTCH -	1	-
5	522676702	STOP -	1	-
6	539119680	ADAPTER -	1	-
7	539118911	NIPPLE -	1	-
8	539105072	90DEG.ELBOW 3/8NPT -	1	-
9	522837001	PLUG -	1	-
10	587044814	HOSE -	1	-
11	525749901	KEY -	1	-
12	539109618	O-RING -	1	-
13	539912222	CLAMP -	2	-
14	505280001	TIE WRAP -	1	-
15	874780716	BOLT -	1	-
16	581332801	BOLT -	1	-
17	532150406	BOLT -	4	-
18	574233801	SCREW -	3	-
19	872140508	BOLT -	3	-
20	539103153	NUT -	1	-
21	539112899	NUT, 5/16-18, NYLOC -	8	-
22	539102582	NUT	1	-

Ref.	Article N.	Description	Qty	Kit
		-		
23	539990247	WASHER -	1	-
24	539102593	WASHER -	4	-
25	539125626	WASHER -	1	-
26	525554201	HARNESS *NOT SHOWN*	1	-
27	574825801	KIT *SPARK ARRESTOR*	1	-
28	586839701	GASKET -	2	-
1	574482802	FRAME *w/ SAFETY DECALS*	1	-
2	574215602	PLATE *ORG*	1	-
3	574215702	PLATE *ORG*	1	-
4	522675702	BUMPER *ORG*	1	-
5	587898002	GUARD *GRY*	1	-
6	574228602	PLATE *GRY*	1	-
7	577327702	FRAME -	1	-
8	529279603	MOUNT -	1	-
9	529279703	MOUNT -	1	-
10	529279903	MOUNT -	1	-
11	529280003	MOUNT -	1	-
12	510082101	MOUNT -	4	-
13	510083201	MOUNT -	4	-
14	510040301	BRACKET -	2	-
15	539102845	SPRING -	4	-

Ref.	Article N.	Description	Qty	Kit
16	574388001	PIN -	2	-
17	539200715	PIN -	2	-
18	575811501	BUMPER -	2	-
19	522801401	BUMPER -	4	-
20	539102502	STUD -	4	-
21	539109867	CLAMP -	1	-
22	539131780	BOLT -	2	-
23	525544001	BOLT -	2	-
24	874490512	BOLT -	14	-
25	874490632	SCREW -	4	-
26	525612801	SCREW -	4	-
27	574233801	SCREW -	2	-
28	580754601	BOLT -	6	-
29	539100145	BOLT -	2	-
30	817490508	SCREW -	6	-
31	817490516	SCREW -	7	-
32	539111028	NUTSERT 5/16-18 THICK GRIP -	2	-
33	521996501	NUT -	8	-
34	539108120	NUT -	2	-
35	539112899	NUT, 5/16-18, NYLOC -	22	-
36	525829101	NUT -	6	-
37	873800400	NUT	4	-

Ref.	Article N.	Description	Qty	Kit
		-		
38	539102653	WASHER -	6	-
39	539109600	WASHER -	6	-
40	819111116	WASHER -	4	-
41	539111897	WASHER -	4	-
42	576738801	KIT -	1	-
1	506007902	FRAME -	1	-
2	573978301	DRIVE BELT -	1	-
3	576035902	RESERVOIR -	1	-
4	522805401	FILTER -	1	-
5	506120501	PUMP *LT*	1	-
6	506120401	PUMP *RT*	1	-
7	510019002	PULLEY -	2	-
8	510283702	PULLEY -	1	-
9	525435601	PIVOT -	1	-
10	510206301	PIVOT -	1	-
11	510041603	ARM -	1	-
12	522805001	TUBE -	1	-
13	510254501	SHIELD -	1	-
14	539114662	SHIELD, DUST -	1	-
15	574398502	SHIELD -	2	-
16	577437201	SPRING -	1	-

Ref.	Article N.	Description	Qty	Kit
17	576577701	ASSEMBLY -	2	-
18	539101242	ELBOW -	1	-
19	539103316	CONNECTION -	2	-
20	539101239	CONNECTOR -	4	-
21	539101237	CONNECTION -	7	-
22	510013601	LINE -	1	-
23	510013701	LINE -	1	-
24	510013801	LINE -	1	-
25	510013901	LINE -	1	-
26	510014001	LINE -	1	-
27	510014501	LINE -	2	-
28	510010701	LINE -	1	-
29	575872301	HEAD -	1	-
30	522805301	CAP -	1	-
31	539105168	CAP -	1	-
32	539101177	KEY -	2	-
33	872140506	BOLT -	4	-
34	872140610	BOLT -	1	-
35	872140622	BOLT -	1	-
36	872140512	BOLT -	1	-
37	874780844	BOLT -	8	-
38	525544801	SCREW	4	-

Ref.	Article N.	Description	Qty	Kit
		-		
39	525834201	SCREW -	4	-
40	817490516	SCREW -	2	-
41	539990072	SCREW -	2	-
42	539103433	SCREW -	1	-
43	539102717	SCREW -	4	-
44	539990613	NUT -	1	-
45	539112899	NUT, 5/16-18, NYLOC -	5	-
46	521996501	NUT -	4	-
47	539200282	NUT -	4	-
48	521991101	NUT -	5	-
49	539115528	1/2` CONTACT BELLSPR -	1	-
50	522023401	WASHER -	1	-
51	539990052	WASHER -	2	-
52	819182212	WASHER -	1	-
1	584280401	FUEL TANK ASSY -	1	-
2	584280301	FUEL TANK ASSY -	1	-
3	529280202	PANEL -	1	-
4	574514001	TIMER -	1	-
5	586161801	HOUR METER -	1	-
6	574455401	SWITCH -	1	-
7	582107602	SWITCH -	1	-

Ref.	Article N.	Description	Qty	Kit
8	574455501	KEY -	1	-
9	574206901	CABLE -	1	-
10	574207002	CABLE -	1	-
11	539132624	KNOB -	1	-
12	575018101	CAP -	2	-
13	576978701	HUB CAP -	1	-
14	539103178	NUT CAP -	1	-
15	576618101	TANK VENT -	2	-
16	574235301	LOOM -	1	-
17	539102436	BATTERY -	1	-
18	577150501	SERVICE KIT -	1	-
19	522718701	CABLE -	1	-
20	522710701	CABLE -	1	-
21	525865401	TUBE ASSY -	2	-
22	587044533	HOSE -	1	-
23	587044530	HOSE -	1	-
24	587593401	HOSE ASSY -	1	-
25	532414114	FILTER -	2	-
26	576927001	MOUNT -	1	-
27	576926901	MOUNT -	1	-
28	510029902	BRACKET -	1	-
29	577104002	BRACKET	1	-

Ref.	Article N.	Description	Qty	Kit
		-		
30	588107201	BRACKET -	1	-
31	539102759	INSULATOR -	2	-
32	510064001	HOOK -	2	-
33	576618201	GROMMET -	2	-
34	539105245	GROMMET -	2	-
35	539105974	GROMMET -	1	-
36	539990580	SCREW -	1	-
37	872140506	BOLT -	2	-
38	539114341	SCREW -	3	-
39	574822701	SCREW -	4	-
40	539990997	NUT -	2	-
41	539976977	NUT -	4	-
42	539108120	NUT -	1	-
43	539112899	NUT, 5/16-18, NYLOC -	2	-
44	539990598	WASHER -	1	-
45	589670101	HARNESS *NOT SHOWN*	1	-
1	588127602	DECK -	1	-
2	575658403	DRIVE BELT -	1	-
3	539105711	BLADE -	3	-
4	510437502	BAFFLE -	1	-
5	539130646	PULLEY -	3	-

Ref.	Article N.	Description	Qty	Kit
6	510015101	PULLEY -	1	-
7	525598201	PULLEY -	1	-
8	510019601	PULLEY -	1	-
9	574722201	SERVICE KIT -	1	-
10	580943304	SPINDLE -	3	-
11	574169601	ROLLER -	5	-
12	510131202	SHIELD -	2	-
13	510254501	SHIELD -	2	-
14	510262201	SHIELD -	1	-
15	539976998	NIPPLE -	3	-
16	525310901	SPRING -	1	-
17	580942201	HUB -	3	-
18	539130638	BEARING -	6	-
19	510263701	BEARING -	3	-
20	522729701	BEARING -	1	-
21	539104763	CLIP -	8	-
22	574262102	GUIDE -	1	-
23	574262201	KEEPER -	1	-
24	580942501	CARRIER -	3	-
25	574197002	BRACKET -	1	-
26	525486002	BRACKET -	1	-
27	525485801	CHUTE	1	-

Ref.	Article N.	Description	Qty	Kit
		-		
28	580942701	V-RING -	3	-
29	580942301	SPACER -	3	-
30	525465601	SPACER -	1	-
31	574196401	TUBE -	2	-
32	574196501	TUBE -	1	-
33	580942601	SEAL -	6	-
34	539990209	SCREW -	8	-
35	539101686	SCREW -	1	-
36	539130315	BOLT -	9	-
37	574210601	SCREW -	18	-
38	525612801	SCREW -	2	-
39	539131781	BOLT -	2	-
40	874490512	BOLT -	3	-
41	539115620	1/4-20X3/4 CARR BLT -	4	-
42	539128101	BOLT -	1	-
43	574202001	BOLT -	1	-
44	539119007	SCREW -	3	-
45	539107271	SCREW -	1	-
46	510022401	BOLT -	1	-
47	510022301	SCREW -	3	-
48	539102933	SCREW -	3	-

Ref.	Article N.	Description	Qty	Kit
49	539100472	SCREW -	2	-
50	521991101	NUT -	4	-
51	539130653	NUT -	3	-
52	539976978	NUT -	4	-
53	521996501	NUT -	4	-
54	539112899	NUT, 5/16-18, NYLOC -	9	-
55	810030500	WASHER -	8	-
56	539109600	WASHER -	9	-
57	539990692	WASHER -	10	-
58	522023401	WASHER -	1	-
59	539106504	WASHER -	3	-
60	522829301	BLADE *OPTIONAL*	3	-
61	574481301	BLADE *OPTIONAL*	3	-
62	522936601	BLADE *OPTIONAL*	3	-
63	539109755	BLADE *OPTIONAL*	3	-
1	510408502	PLATE -	1	-
2	510408602	PLATE -	1	-
3	525822201	PLATE -	2	-
4	510089801	ROD -	2	-
5	510407601	ROD -	1	-
6	510406301	BAR -	1	-
7	510410703	SHAFT	2	-

Ref.	Article N.	Description	Qty	Kit
		-		
8	510409602	SHAFT -	1	-
9	510023601	SHAFT -	4	-
10	510023902	BLOCK -	4	-
11	510412301	PIVOT -	2	-
12	510407201	LATCH -	1	-
13	510406801	LATCH -	1	-
14	510089401	BUSHING -	4	-
15	510089201	BUSHING -	2	-
16	539916561	MACHINE BUSHING -	1	-
17	510029201	SPRING -	2	-
18	510376601	SPRING -	1	-
19	510376701	SPRING -	1	-
20	510106501	STRUT -	2	-
21	510406601	LINK -	1	-
22	510083801	BALL JOINT -	1	-
23	510407501	SWIVEL -	1	-
24	510406401	SWIVEL -	1	-
25	510362501	SPACER -	4	-
26	510408401	SPACER -	1	-
27	525465501	HEIGHT ADJUSTER -	1	-
27	510022502	ARM -	1	-

Ref.	Article N.	Description	Qty	Kit
28	510410002	ARM -	4	-
29	525465501	HEIGHT ADJUSTER -	3	-
29	510022501	ARM -	1	-
30	539102641	CHAIN -	4	-
31	510089501	PAD -	1	-
32	510406701	GUIDE -	1	-
33	510408301	PEDAL -	1	-
34	510407801	PEDAL -	1	-
35	510406501	CAP -	1	-
36	510090101	PIN -	8	-
37	510016501	PIN -	1	-
38	515988201	PIN -	2	-
39	539120993	EYE BOLT -	2	-
40	525822501	KEY -	4	-
41	539105069	RETAINER RING -	4	-
42	539990870	RING -	1	-
43	522705201	RING -	4	-
44	539101949	RETAINER RING -	2	-
45	539102454	RETAINER RING -	3	-
46	539912730	RING -	1	-
47	539990208	SCREW -	2	-
48	539122728	BOLT	1	-

Ref.	Article N.	Description	Qty	Kit
		-		
49	525828901	BOLT -	2	-
50	525465701	BOLT -	4	-
51	525822101	BOLT -	4	-
52	525612801	SCREW -	2	-
53	525829001	BOLT -	2	-
54	525465401	SCREW -	1	-
55	510408201	BOLT -	1	-
56	516035501	BOLT -	1	-
57	522705601	SCREW -	1	-
58	521996501	NUT -	4	-
59	539991112	NUT -	1	-
60	521991101	NUT -	3	-
61	525829101	NUT -	2	-
62	539990625	NUT -	4	-
63	539108677	NUT 3/4-10 HEX ZD -	2	-
64	539112899	NUT, 5/16-18, NYLOC -	8	-
65	539108732	NUT 3/8-24 HEX JAM ZD -	1	-
66	539990122	WASHER -	1	-
1	574805202	MOTOR *RT*	1	-
2	574805201	MOTOR *LT*	1	-
3	525851201	SHAFT	1	-
4	510025901	ARM	1	-

Ref.	Article N.	Description	Qty	Kit
5	515980002	LEVER	1	-
6	539976526	HANDLE	1	-
7	539133047	CALIPER	2	-
8	525851601	PLATE	2	-
9	525851401	SWIVEL	1	-
10	515980301	LINK	1	-
11	539113952	SPRING	1	-
12	525848701	HUB	2	-
13	539977465	BRACKET	1	-
14	539132161	BLADE BUSHING	6	-
15	510089201	BUSHING	2	-
16	539110631	5/16 DIA ROLL PIN	1	-
17	522705901	PIN	1	-
18	539102889	SPLIT PIN	2	-
19	872140610	BOLT	3	-
20	539923463	HCS 3/8-16 X 3-1/4 GR5 ZD	1	-
21	539104984	SCREW	1	-
22	516035501	BOLT	4	-
23	539108732	NUT 3/8-24 HEX JAM ZD	3	-
24	539115617	NUT	1	-
25	521996501	NUT	1	-
26	539200282	NUT	9	-
27	521991101	NUT	8	-
28	819131316	WASHER	1	-
29	525490901	WASHER	2	-
30	539912063	WASHER	1	-
31	539133007	WASHER	2	-
1	501552801	SEAT -	1	-
2	510039302	PAN -	1	-
3	539119741	SWITCH -	1	-
4	539130359	BELT -	1	-
5	510064101	ROD -	1	-
6	585857402	BRACKET -	1	-
7	520283101	SPRING	1	-

Ref.	Article N.	Description	Qty	Kit
		-		
8	510283801	BUMPER -	2	-
9	539913847	BOLT -	2	-
10	539113226	BOLT -	4	-
11	515990601	BOLT -	2	-
12	525834201	SCREW -	2	-
13	521996501	NUT -	4	-
14	539112899	NUT, 5/16-18, NYLOC -	6	-
1	516020301	DAMPER -	2	-
2	525447901	STRUT -	1	-
3	539113792	SWITCH -	1	-
4	532109553	SWITCH -	2	-
5	539131518	BEARING -	4	-
6	586737202	BRACKET -	2	-
7	501741101	BRACKET -	2	-
8	574269401	LEVER -	2	-
9	577042403	SERVICE KIT -	1	-
10	577042303	SERVICE KIT -	1	-
11	576140302	LEVER -	2	-
12	539109149	CONNECTOR -	4	-
12	539112899	NUT, 5/16-18, NYLOC -	6	-
13	539102590	BALL JOINT -	4	-

Ref.	Article N.	Description	Qty	Kit
14	539102845	SPRING -	1	-
15	539020035	SPRING -	1	-
16	576850301	SPRING -	1	-
17	577252401	SPACER -	2	-
18	511594901	BUSHING -	1	-
19	511595001	LINK -	1	-
20	539110607	STUD -	2	-
21	539130894	GRIP -	2	-
22	575811501	BUMPER -	2	-
23	539131799	KNOB -	1	-
24	522559201	LINKAGE -	2	-
25	522842801	LINKAGE -	2	-
26	581437501	BLOCK -	2	-
27	581223001	PLATE -	2	-
28	539976988	PIN -	4	-
29	539104763	CLIP -	4	-
30	872110406	BOLT -	1	-
31	539990316	BOLT -	2	-
32	525544001	BOLT -	4	-
33	874780844	BOLT -	2	-
34	525612801	SCREW -	4	-
35	874780520	BOLT	1	-

Ref.	Article N.	Description	Qty	Kit
		-		
36	874490512	BOLT -	4	-
37	576850402	SCREW -	2	-
38	574822701	SCREW -	6	-
39	539112899	NUT, 5/16-18, NYLOC -	1	-
40	539990223	NUT -	4	-
41	539108120	NUT -	4	-
42	539108010	NUT -	2	-
43	539913847	BOLT -	2	-
44	539990717	NUT -	2	-
46	539108732	NUT 3/8-24 HEX JAM ZD -	4	-
47	539990187	WASHER -	2	-
48	819131316	WASHER -	4	-
49	539990692	WASHER -	4	-
50	539127046	NUT -	1	-
50	819111116	WASHER -	4	-
1	510154601	TIRE -	2	-
2	510154501	TIRE -	2	-
3	539105152	TIRE -	2	-
4	510154502	WHEEL RIM -	2	-
5	525611902	FORK -	2	-
6	539105518	SPACER -	4	-

Ref.	Article N.	Description	Qty	Kit
7	510034301	SEAL -	2	-
8	510034403	BEARING -	4	-
9	539101474	NIPPLE -	2	-
10	510034001	CAP -	2	-
11	539105517	BOLT -	2	-
12	521991101	NUT -	2	-
13	522842601	NUT -	2	-
14	539101173	NUT -	8	-
15	539990250	WASHER -	2	-
16	574824701	WASHER -	2	-
18	539105521	WHEEL ASSY *PNEUMATIC*	2	-
1	510246602	DECAL *CONSOLE*	1	-
2	516038101	DECAL *HEIGHT*	1	-
3	525349701	DECAL *HEIGHT*	1	-
4	532424102	DECAL *SPARK ARRESTOR*	1	-
5	532428676	DECAL *CROWN H SM*	1	-
6	532429196	DECAL *HUSQVARNA*	2	-
7	589283001	DECAL *MOTION CONTROL*	2	-
8	539105744	DECAL *BELT DRIVE WARN*	1	-
9	539105745	DECAL *BATTERY WARNING*	1	-
10	539105746	DECAL *SEVERING*	1	-
11	539107959	DECAL	1	-

Ref.	Article N.	Description	Qty	Kit
		WARNING		
12	585142601	DECAL *TRACKING*	2	-
13	585148801	DECAL *PARK BRAKE*	1	-
14	574437301	DECAL *BELT ROUTE*	1	-
15	574455001	DECAL *CROWN LG*	1	-
16	574569401	DECAL *FUSE*	1	-
17	574569002	DECAL *ROPS WARNING*	1	-
18	574569006	DECAL *ROPS*	1	-
19	574825901	DECAL *SERVICE*	1	-
20	577150101	DECAL *FUEL VALVE*	1	-
21	581384401	DECAL *PZ 60*	1	-
22	581724301	DECAL *NO STEP*	2	-
23	581724401	DECAL *DEFLECTOR*	1	-
24	584904601	DECAL *BLADE WARNING*	1	-
25	539101881	DECAL *EXHAUST WARNING*	1	-

FRAME

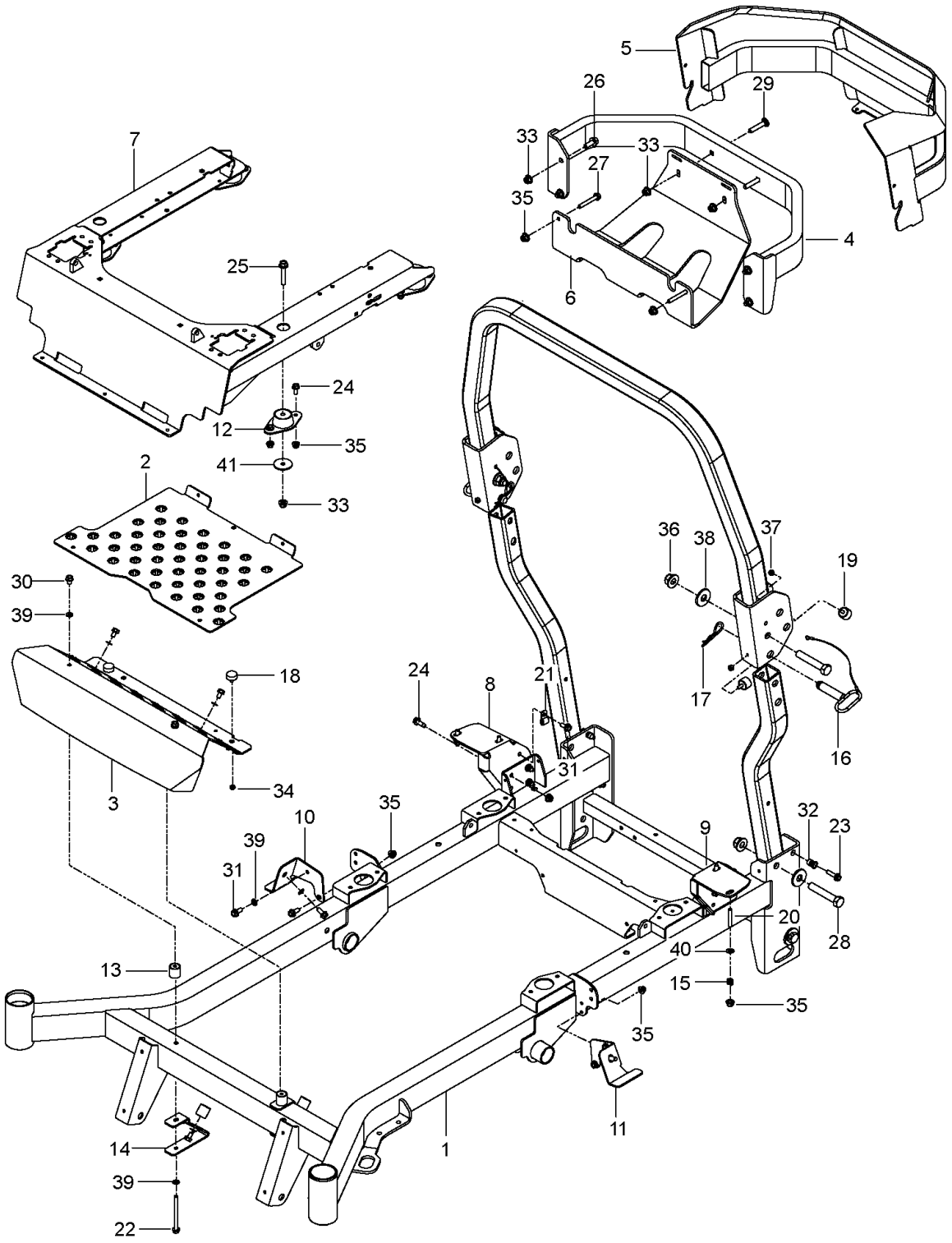

Ref.	Article N.	Description	Qty	Kit
1	510004602	PLATE -	1	-
2	510019801	PULLEY -	1	-
3	525750301	MUFFLER -	1	-

Ref.	Article N.	Description	Qty	Kit
4	525749501	CLUTCH -	1	-
5	522676702	STOP -	1	-
6	539119680	ADAPTER -	1	-
7	539118911	NIPPLE -	1	-
8	539105072	90DEG.ELBOW 3/8NPT -	1	-
9	522837001	PLUG -	1	-
10	587044814	HOSE -	1	-
11	525749901	KEY -	1	-
12	539109618	O-RING -	1	-
13	539912222	CLAMP -	2	-
14	505280001	TIE WRAP -	1	-
15	874780716	BOLT -	1	-
16	581332801	BOLT -	1	-
17	532150406	BOLT -	4	-
18	574233801	SCREW -	3	-
19	872140508	BOLT -	3	-
20	539103153	NUT -	1	-
21	539112899	NUT, 5/16-18, NYLOC -	8	-
22	539102582	NUT -	1	-
23	539990247	WASHER -	1	-
24	539102593	WASHER -	4	-
25	539125626	WASHER	1	-

Ref.	Article N.	Description	Qty	Kit
		-		
26	525554201	HARNESS *NOT SHOWN*	1	-
27	574825801	KIT *SPARK ARRESTOR*	1	-
28	586839701	GASKET -	2	-
1	574482802	FRAME *w/ SAFETY DECALS*	1	-
2	574215602	PLATE *ORG*	1	-
3	574215702	PLATE *ORG*	1	-
4	522675702	BUMPER *ORG*	1	-
5	587898002	GUARD *GRY*	1	-
6	574228602	PLATE *GRY*	1	-
7	577327702	FRAME -	1	-
8	529279603	MOUNT -	1	-
9	529279703	MOUNT -	1	-
10	529279903	MOUNT -	1	-
11	529280003	MOUNT -	1	-
12	510082101	MOUNT -	4	-
13	510083201	MOUNT -	4	-
14	510040301	BRACKET -	2	-
15	539102845	SPRING -	4	-
16	574388001	PIN -	2	-
17	539200715	PIN -	2	-
18	575811501	BUMPER -	2	-

Ref.	Article N.	Description	Qty	Kit
19	522801401	BUMPER -	4	-
20	539102502	STUD -	4	-
21	539109867	CLAMP -	1	-
22	539131780	BOLT -	2	-
23	525544001	BOLT -	2	-
24	874490512	BOLT -	14	-
25	874490632	SCREW -	4	-
26	525612801	SCREW -	4	-
27	574233801	SCREW -	2	-
28	580754601	BOLT -	6	-
29	539100145	BOLT -	2	-
30	817490508	SCREW -	6	-
31	817490516	SCREW -	7	-
32	539111028	NUTSERT 5/16-18 THICK GRIP -	2	-
33	521996501	NUT -	8	-
34	539108120	NUT -	2	-
35	539112899	NUT, 5/16-18, NYLOC -	22	-
36	525829101	NUT -	6	-
37	873800400	NUT -	4	-
38	539102653	WASHER -	6	-
39	539109600	WASHER -	6	-
40	819111116	WASHER	4	-

Ref.	Article N.	Description	Qty	Kit
		-		
41	539111897	WASHER -	4	-
42	576738801	KIT -	1	-
1	506007902	FRAME -	1	-
2	573978301	DRIVE BELT -	1	-
3	576035902	RESERVOIR -	1	-
4	522805401	FILTER -	1	-
5	506120501	PUMP *LT*	1	-
6	506120401	PUMP *RT*	1	-
7	510019002	PULLEY -	2	-
8	510283702	PULLEY -	1	-
9	525435601	PIVOT -	1	-
10	510206301	PIVOT -	1	-
11	510041603	ARM -	1	-
12	522805001	TUBE -	1	-
13	510254501	SHIELD -	1	-
14	539114662	SHIELD, DUST -	1	-
15	574398502	SHIELD -	2	-
16	577437201	SPRING -	1	-
17	576577701	ASSEMBLY -	2	-
18	539101242	ELBOW -	1	-
19	539103316	CONNECTION -	2	-

Ref.	Article N.	Description	Qty	Kit
20	539101239	CONNECTOR -	4	-
21	539101237	CONNECTION -	7	-
22	510013601	LINE -	1	-
23	510013701	LINE -	1	-
24	510013801	LINE -	1	-
25	510013901	LINE -	1	-
26	510014001	LINE -	1	-
27	510014501	LINE -	2	-
28	510010701	LINE -	1	-
29	575872301	HEAD -	1	-
30	522805301	CAP -	1	-
31	539105168	CAP -	1	-
32	539101177	KEY -	2	-
33	872140506	BOLT -	4	-
34	872140610	BOLT -	1	-
35	872140622	BOLT -	1	-
36	872140512	BOLT -	1	-
37	874780844	BOLT -	8	-
38	525544801	SCREW -	4	-
39	525834201	SCREW -	4	-
40	817490516	SCREW -	2	-
41	539990072	SCREW	2	-

Ref.	Article N.	Description	Qty	Kit
		-		
42	539103433	SCREW -	1	-
43	539102717	SCREW -	4	-
44	539990613	NUT -	1	-
45	539112899	NUT, 5/16-18, NYLOC -	5	-
46	521996501	NUT -	4	-
47	539200282	NUT -	4	-
48	521991101	NUT -	5	-
49	539115528	1/2` CONTACT BELLSPR -	1	-
50	522023401	WASHER -	1	-
51	539990052	WASHER -	2	-
52	819182212	WASHER -	1	-
1	584280401	FUEL TANK ASSY -	1	-
2	584280301	FUEL TANK ASSY -	1	-
3	529280202	PANEL -	1	-
4	574514001	TIMER -	1	-
5	586161801	HOUR METER -	1	-
6	574455401	SWITCH -	1	-
7	582107602	SWITCH -	1	-
8	574455501	KEY -	1	-
9	574206901	CABLE -	1	-
10	574207002	CABLE -	1	-

Ref.	Article N.	Description	Qty	Kit
11	539132624	KNOB -	1	-
12	575018101	CAP -	2	-
13	576978701	HUB CAP -	1	-
14	539103178	NUT CAP -	1	-
15	576618101	TANK VENT -	2	-
16	574235301	LOOM -	1	-
17	539102436	BATTERY -	1	-
18	577150501	SERVICE KIT -	1	-
19	522718701	CABLE -	1	-
20	522710701	CABLE -	1	-
21	525865401	TUBE ASSY -	2	-
22	587044533	HOSE -	1	-
23	587044530	HOSE -	1	-
24	587593401	HOSE ASSY -	1	-
25	532414114	FILTER -	2	-
26	576927001	MOUNT -	1	-
27	576926901	MOUNT -	1	-
28	510029902	BRACKET -	1	-
29	577104002	BRACKET -	1	-
30	588107201	BRACKET -	1	-
31	539102759	INSULATOR -	2	-
32	510064001	HOOK	2	-

Ref.	Article N.	Description	Qty	Kit
		-		
33	576618201	GROMMET -	2	-
34	539105245	GROMMET -	2	-
35	539105974	GROMMET -	1	-
36	539990580	SCREW -	1	-
37	872140506	BOLT -	2	-
38	539114341	SCREW -	3	-
39	574822701	SCREW -	4	-
40	539990997	NUT -	2	-
41	539976977	NUT -	4	-
42	539108120	NUT -	1	-
43	539112899	NUT, 5/16-18, NYLOC -	2	-
44	539990598	WASHER -	1	-
45	589670101	HARNESS *NOT SHOWN*	1	-
1	588127602	DECK -	1	-
2	575658403	DRIVE BELT -	1	-
3	539105711	BLADE -	3	-
4	510437502	BAFFLE -	1	-
5	539130646	PULLEY -	3	-
6	510015101	PULLEY -	1	-
7	525598201	PULLEY -	1	-
8	510019601	PULLEY -	1	-

Ref.	Article N.	Description	Qty	Kit
9	574722201	SERVICE KIT -	1	-
10	580943304	SPINDLE -	3	-
11	574169601	ROLLER -	5	-
12	510131202	SHIELD -	2	-
13	510254501	SHIELD -	2	-
14	510262201	SHIELD -	1	-
15	539976998	NIPPLE -	3	-
16	525310901	SPRING -	1	-
17	580942201	HUB -	3	-
18	539130638	BEARING -	6	-
19	510263701	BEARING -	3	-
20	522729701	BEARING -	1	-
21	539104763	CLIP -	8	-
22	574262102	GUIDE -	1	-
23	574262201	KEEPER -	1	-
24	580942501	CARRIER -	3	-
25	574197002	BRACKET -	1	-
26	525486002	BRACKET -	1	-
27	525485801	CHUTE -	1	-
28	580942701	V-RING -	3	-
29	580942301	SPACER -	3	-
30	525465601	SPACER	1	-

Ref.	Article N.	Description	Qty	Kit
		-		
31	574196401	TUBE -	2	-
32	574196501	TUBE -	1	-
33	580942601	SEAL -	6	-
34	539990209	SCREW -	8	-
35	539101686	SCREW -	1	-
36	539130315	BOLT -	9	-
37	574210601	SCREW -	18	-
38	525612801	SCREW -	2	-
39	539131781	BOLT -	2	-
40	874490512	BOLT -	3	-
41	539115620	1/4-20X3/4 CARR BLT -	4	-
42	539128101	BOLT -	1	-
43	574202001	BOLT -	1	-
44	539119007	SCREW -	3	-
45	539107271	SCREW -	1	-
46	510022401	BOLT -	1	-
47	510022301	SCREW -	3	-
48	539102933	SCREW -	3	-
49	539100472	SCREW -	2	-
50	521991101	NUT -	4	-
51	539130653	NUT -	3	-

Ref.	Article N.	Description	Qty	Kit
52	539976978	NUT -	4	-
53	521996501	NUT -	4	-
54	539112899	NUT, 5/16-18, NYLOC -	9	-
55	810030500	WASHER -	8	-
56	539109600	WASHER -	9	-
57	539990692	WASHER -	10	-
58	522023401	WASHER -	1	-
59	539106504	WASHER -	3	-
60	522829301	BLADE *OPTIONAL*	3	-
61	574481301	BLADE *OPTIONAL*	3	-
62	522936601	BLADE *OPTIONAL*	3	-
63	539109755	BLADE *OPTIONAL*	3	-
1	510408502	PLATE -	1	-
2	510408602	PLATE -	1	-
3	525822201	PLATE -	2	-
4	510089801	ROD -	2	-
5	510407601	ROD -	1	-
6	510406301	BAR -	1	-
7	510410703	SHAFT -	2	-
8	510409602	SHAFT -	1	-
9	510023601	SHAFT -	4	-
10	510023902	BLOCK	4	-

Ref.	Article N.	Description	Qty	Kit
		-		
11	510412301	PIVOT -	2	-
12	510407201	LATCH -	1	-
13	510406801	LATCH -	1	-
14	510089401	BUSHING -	4	-
15	510089201	BUSHING -	2	-
16	539916561	MACHINE BUSHING -	1	-
17	510029201	SPRING -	2	-
18	510376601	SPRING -	1	-
19	510376701	SPRING -	1	-
20	510106501	STRUT -	2	-
21	510406601	LINK -	1	-
22	510083801	BALL JOINT -	1	-
23	510407501	SWIVEL -	1	-
24	510406401	SWIVEL -	1	-
25	510362501	SPACER -	4	-
26	510408401	SPACER -	1	-
27	525465501	HEIGHT ADJUSTER -	1	-
27	510022502	ARM -	1	-
28	510410002	ARM -	4	-
29	525465501	HEIGHT ADJUSTER -	3	-
29	510022501	ARM -	1	-

Ref.	Article N.	Description	Qty	Kit
30	539102641	CHAIN -	4	-
31	510089501	PAD -	1	-
32	510406701	GUIDE -	1	-
33	510408301	PEDAL -	1	-
34	510407801	PEDAL -	1	-
35	510406501	CAP -	1	-
36	510090101	PIN -	8	-
37	510016501	PIN -	1	-
38	515988201	PIN -	2	-
39	539120993	EYE BOLT -	2	-
40	525822501	KEY -	4	-
41	539105069	RETAINER RING -	4	-
42	539990870	RING -	1	-
43	522705201	RING -	4	-
44	539101949	RETAINER RING -	2	-
45	539102454	RETAINER RING -	3	-
46	539912730	RING -	1	-
47	539990208	SCREW -	2	-
48	539122728	BOLT -	1	-
49	525828901	BOLT -	2	-
50	525465701	BOLT -	4	-
51	525822101	BOLT	4	-

Ref.	Article N.	Description	Qty	Kit
		-		
52	525612801	SCREW -	2	-
53	525829001	BOLT -	2	-
54	525465401	SCREW -	1	-
55	510408201	BOLT -	1	-
56	516035501	BOLT -	1	-
57	522705601	SCREW -	1	-
58	521996501	NUT -	4	-
59	539991112	NUT -	1	-
60	521991101	NUT -	3	-
61	525829101	NUT -	2	-
62	539990625	NUT -	4	-
63	539108677	NUT 3/4-10 HEX ZD -	2	-
64	539112899	NUT, 5/16-18, NYLOC -	8	-
65	539108732	NUT 3/8-24 HEX JAM ZD -	1	-
66	539990122	WASHER -	1	-
1	574805202	MOTOR *RT*	1	-
2	574805201	MOTOR *LT*	1	-
3	525851201	SHAFT	1	-
4	510025901	ARM	1	-
5	515980002	LEVER	1	-
6	539976526	HANDLE	1	-
7	539133047	CALIPER	2	-
8	525851601	PLATE	2	-
9	525851401	SWIVEL	1	-

Ref.	Article N.	Description	Qty	Kit
10	515980301	LINK	1	-
11	539113952	SPRING	1	-
12	525848701	HUB	2	-
13	539977465	BRACKET	1	-
14	539132161	BLADE BUSHING	6	-
15	510089201	BUSHING	2	-
16	539110631	5/16 DIA ROLL PIN	1	-
17	522705901	PIN	1	-
18	539102889	SPLIT PIN	2	-
19	872140610	BOLT	3	-
20	539923463	HCS 3/8-16 X 3-1/4 GR5 ZD	1	-
21	539104984	SCREW	1	-
22	516035501	BOLT	4	-
23	539108732	NUT 3/8-24 HEX JAM ZD	3	-
24	539115617	NUT	1	-
25	521996501	NUT	1	-
26	539200282	NUT	9	-
27	521991101	NUT	8	-
28	819131316	WASHER	1	-
29	525490901	WASHER	2	-
30	539912063	WASHER	1	-
31	539133007	WASHER	2	-
1	501552801	SEAT -	1	-
2	510039302	PAN -	1	-
3	539119741	SWITCH -	1	-
4	539130359	BELT -	1	-
5	510064101	ROD -	1	-
6	585857402	BRACKET -	1	-
7	520283101	SPRING -	1	-
8	510283801	BUMPER -	2	-
9	539913847	BOLT -	2	-

Ref.	Article N.	Description	Qty	Kit
10	539113226	BOLT -	4	-
11	515990601	BOLT -	2	-
12	525834201	SCREW -	2	-
13	521996501	NUT -	4	-
14	539112899	NUT, 5/16-18, NYLOC -	6	-
1	516020301	DAMPER -	2	-
2	525447901	STRUT -	1	-
3	539113792	SWITCH -	1	-
4	532109553	SWITCH -	2	-
5	539131518	BEARING -	4	-
6	586737202	BRACKET -	2	-
7	501741101	BRACKET -	2	-
8	574269401	LEVER -	2	-
9	577042403	SERVICE KIT -	1	-
10	577042303	SERVICE KIT -	1	-
11	576140302	LEVER -	2	-
12	539109149	CONNECTOR -	4	-
12	539112899	NUT, 5/16-18, NYLOC -	6	-
13	539102590	BALL JOINT -	4	-
14	539102845	SPRING -	1	-
15	539020035	SPRING -	1	-
16	576850301	SPRING	1	-

Ref.	Article N.	Description	Qty	Kit
		-		
17	577252401	SPACER -	2	-
18	511594901	BUSHING -	1	-
19	511595001	LINK -	1	-
20	539110607	STUD -	2	-
21	539130894	GRIP -	2	-
22	575811501	BUMPER -	2	-
23	539131799	KNOB -	1	-
24	522559201	LINKAGE -	2	-
25	522842801	LINKAGE -	2	-
26	581437501	BLOCK -	2	-
27	581223001	PLATE -	2	-
28	539976988	PIN -	4	-
29	539104763	CLIP -	4	-
30	872110406	BOLT -	1	-
31	539990316	BOLT -	2	-
32	525544001	BOLT -	4	-
33	874780844	BOLT -	2	-
34	525612801	SCREW -	4	-
35	874780520	BOLT -	1	-
36	874490512	BOLT -	4	-
37	576850402	SCREW -	2	-

Ref.	Article N.	Description	Qty	Kit
38	574822701	SCREW -	6	-
39	539112899	NUT, 5/16-18, NYLOC -	1	-
40	539990223	NUT -	4	-
41	539108120	NUT -	4	-
42	539108010	NUT -	2	-
43	539913847	BOLT -	2	-
44	539990717	NUT -	2	-
46	539108732	NUT 3/8-24 HEX JAM ZD -	4	-
47	539990187	WASHER -	2	-
48	819131316	WASHER -	4	-
49	539990692	WASHER -	4	-
50	539127046	NUT -	1	-
50	819111116	WASHER -	4	-
1	510154601	TIRE -	2	-
2	510154501	TIRE -	2	-
3	539105152	TIRE -	2	-
4	510154502	WHEEL RIM -	2	-
5	525611902	FORK -	2	-
6	539105518	SPACER -	4	-
7	510034301	SEAL -	2	-
8	510034403	BEARING -	4	-
9	539101474	NIPPLE	2	-

Ref.	Article N.	Description	Qty	Kit
		-		
10	510034001	CAP -	2	-
11	539105517	BOLT -	2	-
12	521991101	NUT -	2	-
13	522842601	NUT -	2	-
14	539101173	NUT -	8	-
15	539990250	WASHER -	2	-
16	574824701	WASHER -	2	-
18	539105521	WHEEL ASSY *PNEUMATIC*	2	-
1	510246602	DECAL *CONSOLE*	1	-
2	516038101	DECAL *HEIGHT*	1	-
3	525349701	DECAL *HEIGHT*	1	-
4	532424102	DECAL *SPARK ARRESTOR*	1	-
5	532428676	DECAL *CROWN H SM*	1	-
6	532429196	DECAL *HUSQVARNA*	2	-
7	589283001	DECAL *MOTION CONTROL*	2	-
8	539105744	DECAL *BELT DRIVE WARN*	1	-
9	539105745	DECAL *BATTERY WARNING*	1	-
10	539105746	DECAL *SEVERING*	1	-
11	539107959	DECAL *WARNING*	1	-
12	585142601	DECAL *TRACKING*	2	-
13	585148801	DECAL *PARK BRAKE*	1	-

Ref.	Article N.	Description	Qty	Kit
14	574437301	DECAL *BELT ROUTE*	1	-
15	574455001	DECAL *CROWN LG*	1	-
16	574569401	DECAL *FUSE*	1	-
17	574569002	DECAL *ROPS WARNING*	1	-
18	574569006	DECAL *ROPS*	1	-
19	574825901	DECAL *SERVICE*	1	-
20	577150101	DECAL *FUEL VALVE*	1	-
21	581384401	DECAL *PZ 60*	1	-
22	581724301	DECAL *NO STEP*	2	-
23	581724401	DECAL *DEFLECTOR*	1	-
24	584904601	DECAL *BLADE WARNING*	1	-
25	539101881	DECAL *EXHAUST WARNING*	1	-

HYDRAULIC PUMP - MOTOR

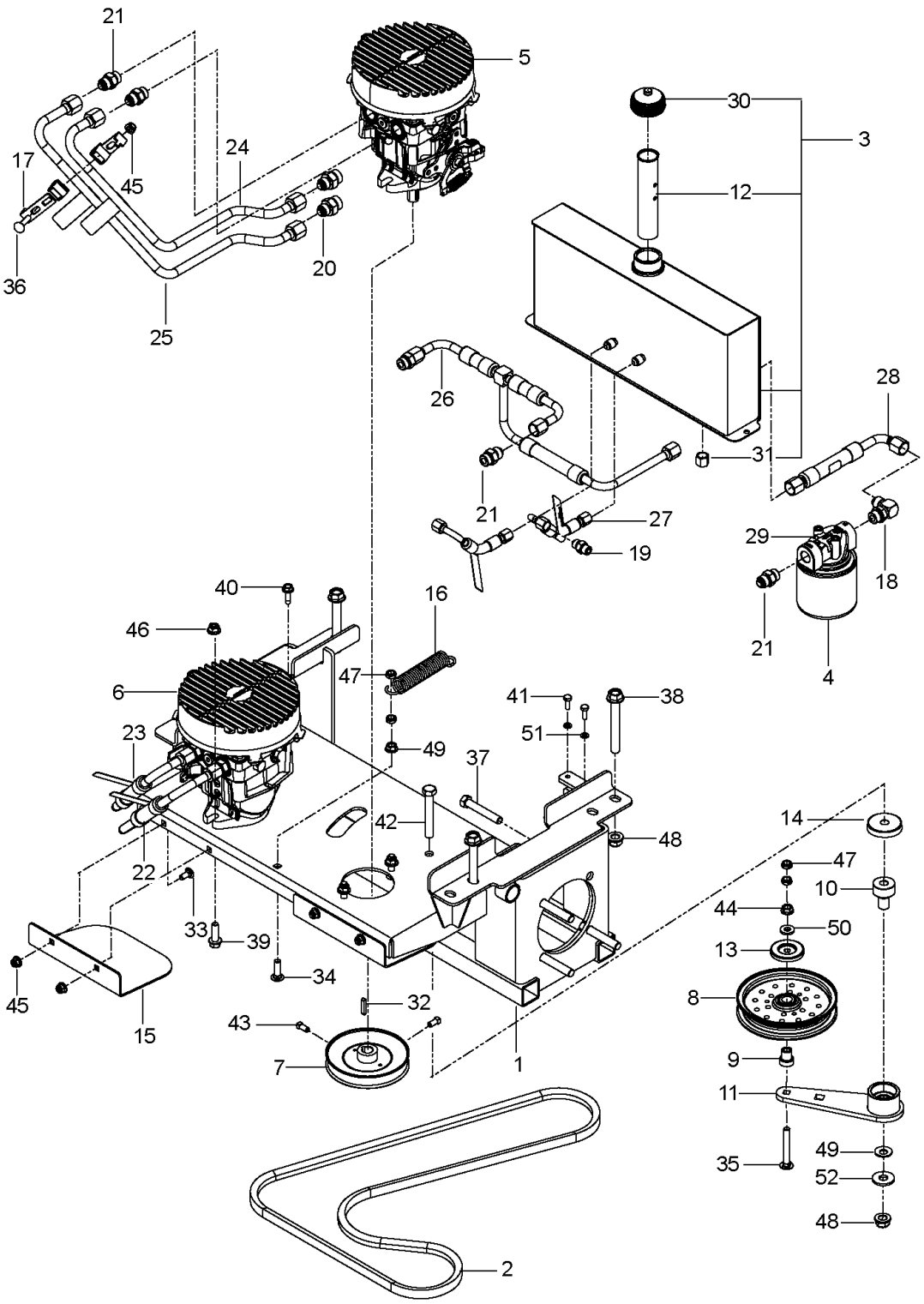

Ref.	Article N.	Description	Qty	Kit
1	510004602	PLATE -	1	-
2	510019801	PULLEY -	1	-
3	525750301	MUFFLER -	1	-

Ref.	Article N.	Description	Qty	Kit
4	525749501	CLUTCH -	1	-
5	522676702	STOP -	1	-
6	539119680	ADAPTER -	1	-
7	539118911	NIPPLE -	1	-
8	539105072	90DEG.ELBOW 3/8NPT -	1	-
9	522837001	PLUG -	1	-
10	587044814	HOSE -	1	-
11	525749901	KEY -	1	-
12	539109618	O-RING -	1	-
13	539912222	CLAMP -	2	-
14	505280001	TIE WRAP -	1	-
15	874780716	BOLT -	1	-
16	581332801	BOLT -	1	-
17	532150406	BOLT -	4	-
18	574233801	SCREW -	3	-
19	872140508	BOLT -	3	-
20	539103153	NUT -	1	-
21	539112899	NUT, 5/16-18, NYLOC -	8	-
22	539102582	NUT -	1	-
23	539990247	WASHER -	1	-
24	539102593	WASHER -	4	-
25	539125626	WASHER	1	-

Ref.	Article N.	Description	Qty	Kit
		-		
26	525554201	HARNESS *NOT SHOWN*	1	-
27	574825801	KIT *SPARK ARRESTOR*	1	-
28	586839701	GASKET -	2	-
1	574482802	FRAME *w/ SAFETY DECALS*	1	-
2	574215602	PLATE *ORG*	1	-
3	574215702	PLATE *ORG*	1	-
4	522675702	BUMPER *ORG*	1	-
5	587898002	GUARD *GRY*	1	-
6	574228602	PLATE *GRY*	1	-
7	577327702	FRAME -	1	-
8	529279603	MOUNT -	1	-
9	529279703	MOUNT -	1	-
10	529279903	MOUNT -	1	-
11	529280003	MOUNT -	1	-
12	510082101	MOUNT -	4	-
13	510083201	MOUNT -	4	-
14	510040301	BRACKET -	2	-
15	539102845	SPRING -	4	-
16	574388001	PIN -	2	-
17	539200715	PIN -	2	-
18	575811501	BUMPER -	2	-

Ref.	Article N.	Description	Qty	Kit
19	522801401	BUMPER -	4	-
20	539102502	STUD -	4	-
21	539109867	CLAMP -	1	-
22	539131780	BOLT -	2	-
23	525544001	BOLT -	2	-
24	874490512	BOLT -	14	-
25	874490632	SCREW -	4	-
26	525612801	SCREW -	4	-
27	574233801	SCREW -	2	-
28	580754601	BOLT -	6	-
29	539100145	BOLT -	2	-
30	817490508	SCREW -	6	-
31	817490516	SCREW -	7	-
32	539111028	NUTSERT 5/16-18 THICK GRIP -	2	-
33	521996501	NUT -	8	-
34	539108120	NUT -	2	-
35	539112899	NUT, 5/16-18, NYLOC -	22	-
36	525829101	NUT -	6	-
37	873800400	NUT -	4	-
38	539102653	WASHER -	6	-
39	539109600	WASHER -	6	-
40	819111116	WASHER	4	-

Ref.	Article N.	Description	Qty	Kit
		-		
41	539111897	WASHER -	4	-
42	576738801	KIT -	1	-
1	506007902	FRAME -	1	-
2	573978301	DRIVE BELT -	1	-
3	576035902	RESERVOIR -	1	-
4	522805401	FILTER -	1	-
5	506120501	PUMP *LT*	1	-
6	506120401	PUMP *RT*	1	-
7	510019002	PULLEY -	2	-
8	510283702	PULLEY -	1	-
9	525435601	PIVOT -	1	-
10	510206301	PIVOT -	1	-
11	510041603	ARM -	1	-
12	522805001	TUBE -	1	-
13	510254501	SHIELD -	1	-
14	539114662	SHIELD, DUST -	1	-
15	574398502	SHIELD -	2	-
16	577437201	SPRING -	1	-
17	576577701	ASSEMBLY -	2	-
18	539101242	ELBOW -	1	-
19	539103316	CONNECTION -	2	-

Ref.	Article N.	Description	Qty	Kit
20	539101239	CONNECTOR -	4	-
21	539101237	CONNECTION -	7	-
22	510013601	LINE -	1	-
23	510013701	LINE -	1	-
24	510013801	LINE -	1	-
25	510013901	LINE -	1	-
26	510014001	LINE -	1	-
27	510014501	LINE -	2	-
28	510010701	LINE -	1	-
29	575872301	HEAD -	1	-
30	522805301	CAP -	1	-
31	539105168	CAP -	1	-
32	539101177	KEY -	2	-
33	872140506	BOLT -	4	-
34	872140610	BOLT -	1	-
35	872140622	BOLT -	1	-
36	872140512	BOLT -	1	-
37	874780844	BOLT -	8	-
38	525544801	SCREW -	4	-
39	525834201	SCREW -	4	-
40	817490516	SCREW -	2	-
41	539990072	SCREW	2	-

Ref.	Article N.	Description	Qty	Kit
		-		
42	539103433	SCREW -	1	-
43	539102717	SCREW -	4	-
44	539990613	NUT -	1	-
45	539112899	NUT, 5/16-18, NYLOC -	5	-
46	521996501	NUT -	4	-
47	539200282	NUT -	4	-
48	521991101	NUT -	5	-
49	539115528	1/2` CONTACT BELLSPR -	1	-
50	522023401	WASHER -	1	-
51	539990052	WASHER -	2	-
52	819182212	WASHER -	1	-
1	584280401	FUEL TANK ASSY -	1	-
2	584280301	FUEL TANK ASSY -	1	-
3	529280202	PANEL -	1	-
4	574514001	TIMER -	1	-
5	586161801	HOUR METER -	1	-
6	574455401	SWITCH -	1	-
7	582107602	SWITCH -	1	-
8	574455501	KEY -	1	-
9	574206901	CABLE -	1	-
10	574207002	CABLE -	1	-

Ref.	Article N.	Description	Qty	Kit
11	539132624	KNOB -	1	-
12	575018101	CAP -	2	-
13	576978701	HUB CAP -	1	-
14	539103178	NUT CAP -	1	-
15	576618101	TANK VENT -	2	-
16	574235301	LOOM -	1	-
17	539102436	BATTERY -	1	-
18	577150501	SERVICE KIT -	1	-
19	522718701	CABLE -	1	-
20	522710701	CABLE -	1	-
21	525865401	TUBE ASSY -	2	-
22	587044533	HOSE -	1	-
23	587044530	HOSE -	1	-
24	587593401	HOSE ASSY -	1	-
25	532414114	FILTER -	2	-
26	576927001	MOUNT -	1	-
27	576926901	MOUNT -	1	-
28	510029902	BRACKET -	1	-
29	577104002	BRACKET -	1	-
30	588107201	BRACKET -	1	-
31	539102759	INSULATOR -	2	-
32	510064001	HOOK	2	-

Ref.	Article N.	Description	Qty	Kit
		-		
33	576618201	GROMMET -	2	-
34	539105245	GROMMET -	2	-
35	539105974	GROMMET -	1	-
36	539990580	SCREW -	1	-
37	872140506	BOLT -	2	-
38	539114341	SCREW -	3	-
39	574822701	SCREW -	4	-
40	539990997	NUT -	2	-
41	539976977	NUT -	4	-
42	539108120	NUT -	1	-
43	539112899	NUT, 5/16-18, NYLOC -	2	-
44	539990598	WASHER -	1	-
45	589670101	HARNESS *NOT SHOWN*	1	-
1	588127602	DECK -	1	-
2	575658403	DRIVE BELT -	1	-
3	539105711	BLADE -	3	-
4	510437502	BAFFLE -	1	-
5	539130646	PULLEY -	3	-
6	510015101	PULLEY -	1	-
7	525598201	PULLEY -	1	-
8	510019601	PULLEY -	1	-

Ref.	Article N.	Description	Qty	Kit
9	574722201	SERVICE KIT -	1	-
10	580943304	SPINDLE -	3	-
11	574169601	ROLLER -	5	-
12	510131202	SHIELD -	2	-
13	510254501	SHIELD -	2	-
14	510262201	SHIELD -	1	-
15	539976998	NIPPLE -	3	-
16	525310901	SPRING -	1	-
17	580942201	HUB -	3	-
18	539130638	BEARING -	6	-
19	510263701	BEARING -	3	-
20	522729701	BEARING -	1	-
21	539104763	CLIP -	8	-
22	574262102	GUIDE -	1	-
23	574262201	KEEPER -	1	-
24	580942501	CARRIER -	3	-
25	574197002	BRACKET -	1	-
26	525486002	BRACKET -	1	-
27	525485801	CHUTE -	1	-
28	580942701	V-RING -	3	-
29	580942301	SPACER -	3	-
30	525465601	SPACER	1	-

Ref.	Article N.	Description	Qty	Kit
		-		
31	574196401	TUBE -	2	-
32	574196501	TUBE -	1	-
33	580942601	SEAL -	6	-
34	539990209	SCREW -	8	-
35	539101686	SCREW -	1	-
36	539130315	BOLT -	9	-
37	574210601	SCREW -	18	-
38	525612801	SCREW -	2	-
39	539131781	BOLT -	2	-
40	874490512	BOLT -	3	-
41	539115620	1/4-20X3/4 CARR BLT -	4	-
42	539128101	BOLT -	1	-
43	574202001	BOLT -	1	-
44	539119007	SCREW -	3	-
45	539107271	SCREW -	1	-
46	510022401	BOLT -	1	-
47	510022301	SCREW -	3	-
48	539102933	SCREW -	3	-
49	539100472	SCREW -	2	-
50	521991101	NUT -	4	-
51	539130653	NUT -	3	-

Ref.	Article N.	Description	Qty	Kit
52	539976978	NUT -	4	-
53	521996501	NUT -	4	-
54	539112899	NUT, 5/16-18, NYLOC -	9	-
55	810030500	WASHER -	8	-
56	539109600	WASHER -	9	-
57	539990692	WASHER -	10	-
58	522023401	WASHER -	1	-
59	539106504	WASHER -	3	-
60	522829301	BLADE *OPTIONAL*	3	-
61	574481301	BLADE *OPTIONAL*	3	-
62	522936601	BLADE *OPTIONAL*	3	-
63	539109755	BLADE *OPTIONAL*	3	-
1	510408502	PLATE -	1	-
2	510408602	PLATE -	1	-
3	525822201	PLATE -	2	-
4	510089801	ROD -	2	-
5	510407601	ROD -	1	-
6	510406301	BAR -	1	-
7	510410703	SHAFT -	2	-
8	510409602	SHAFT -	1	-
9	510023601	SHAFT -	4	-
10	510023902	BLOCK	4	-

Ref.	Article N.	Description	Qty	Kit
		-		
11	510412301	PIVOT -	2	-
12	510407201	LATCH -	1	-
13	510406801	LATCH -	1	-
14	510089401	BUSHING -	4	-
15	510089201	BUSHING -	2	-
16	539916561	MACHINE BUSHING -	1	-
17	510029201	SPRING -	2	-
18	510376601	SPRING -	1	-
19	510376701	SPRING -	1	-
20	510106501	STRUT -	2	-
21	510406601	LINK -	1	-
22	510083801	BALL JOINT -	1	-
23	510407501	SWIVEL -	1	-
24	510406401	SWIVEL -	1	-
25	510362501	SPACER -	4	-
26	510408401	SPACER -	1	-
27	525465501	HEIGHT ADJUSTER -	1	-
27	510022502	ARM -	1	-
28	510410002	ARM -	4	-
29	525465501	HEIGHT ADJUSTER -	3	-
29	510022501	ARM -	1	-

Ref.	Article N.	Description	Qty	Kit
30	539102641	CHAIN -	4	-
31	510089501	PAD -	1	-
32	510406701	GUIDE -	1	-
33	510408301	PEDAL -	1	-
34	510407801	PEDAL -	1	-
35	510406501	CAP -	1	-
36	510090101	PIN -	8	-
37	510016501	PIN -	1	-
38	515988201	PIN -	2	-
39	539120993	EYE BOLT -	2	-
40	525822501	KEY -	4	-
41	539105069	RETAINER RING -	4	-
42	539990870	RING -	1	-
43	522705201	RING -	4	-
44	539101949	RETAINER RING -	2	-
45	539102454	RETAINER RING -	3	-
46	539912730	RING -	1	-
47	539990208	SCREW -	2	-
48	539122728	BOLT -	1	-
49	525828901	BOLT -	2	-
50	525465701	BOLT -	4	-
51	525822101	BOLT	4	-

Ref.	Article N.	Description	Qty	Kit
		-		
52	525612801	SCREW -	2	-
53	525829001	BOLT -	2	-
54	525465401	SCREW -	1	-
55	510408201	BOLT -	1	-
56	516035501	BOLT -	1	-
57	522705601	SCREW -	1	-
58	521996501	NUT -	4	-
59	539991112	NUT -	1	-
60	521991101	NUT -	3	-
61	525829101	NUT -	2	-
62	539990625	NUT -	4	-
63	539108677	NUT 3/4-10 HEX ZD -	2	-
64	539112899	NUT, 5/16-18, NYLOC -	8	-
65	539108732	NUT 3/8-24 HEX JAM ZD -	1	-
66	539990122	WASHER -	1	-
1	574805202	MOTOR *RT*	1	-
2	574805201	MOTOR *LT*	1	-
3	525851201	SHAFT	1	-
4	510025901	ARM	1	-
5	515980002	LEVER	1	-
6	539976526	HANDLE	1	-
7	539133047	CALIPER	2	-
8	525851601	PLATE	2	-
9	525851401	SWIVEL	1	-

Ref.	Article N.	Description	Qty	Kit
10	515980301	LINK	1	-
11	539113952	SPRING	1	-
12	525848701	HUB	2	-
13	539977465	BRACKET	1	-
14	539132161	BLADE BUSHING	6	-
15	510089201	BUSHING	2	-
16	539110631	5/16 DIA ROLL PIN	1	-
17	522705901	PIN	1	-
18	539102889	SPLIT PIN	2	-
19	872140610	BOLT	3	-
20	539923463	HCS 3/8-16 X 3-1/4 GR5 ZD	1	-
21	539104984	SCREW	1	-
22	516035501	BOLT	4	-
23	539108732	NUT 3/8-24 HEX JAM ZD	3	-
24	539115617	NUT	1	-
25	521996501	NUT	1	-
26	539200282	NUT	9	-
27	521991101	NUT	8	-
28	819131316	WASHER	1	-
29	525490901	WASHER	2	-
30	539912063	WASHER	1	-
31	539133007	WASHER	2	-
1	501552801	SEAT -	1	-
2	510039302	PAN -	1	-
3	539119741	SWITCH -	1	-
4	539130359	BELT -	1	-
5	510064101	ROD -	1	-
6	585857402	BRACKET -	1	-
7	520283101	SPRING -	1	-
8	510283801	BUMPER -	2	-
9	539913847	BOLT -	2	-

Ref.	Article N.	Description	Qty	Kit
10	539113226	BOLT -	4	-
11	515990601	BOLT -	2	-
12	525834201	SCREW -	2	-
13	521996501	NUT -	4	-
14	539112899	NUT, 5/16-18, NYLOC -	6	-
1	516020301	DAMPER -	2	-
2	525447901	STRUT -	1	-
3	539113792	SWITCH -	1	-
4	532109553	SWITCH -	2	-
5	539131518	BEARING -	4	-
6	586737202	BRACKET -	2	-
7	501741101	BRACKET -	2	-
8	574269401	LEVER -	2	-
9	577042403	SERVICE KIT -	1	-
10	577042303	SERVICE KIT -	1	-
11	576140302	LEVER -	2	-
12	539109149	CONNECTOR -	4	-
12	539112899	NUT, 5/16-18, NYLOC -	6	-
13	539102590	BALL JOINT -	4	-
14	539102845	SPRING -	1	-
15	539020035	SPRING -	1	-
16	576850301	SPRING	1	-

Ref.	Article N.	Description	Qty	Kit
		-		
17	577252401	SPACER -	2	-
18	511594901	BUSHING -	1	-
19	511595001	LINK -	1	-
20	539110607	STUD -	2	-
21	539130894	GRIP -	2	-
22	575811501	BUMPER -	2	-
23	539131799	KNOB -	1	-
24	522559201	LINKAGE -	2	-
25	522842801	LINKAGE -	2	-
26	581437501	BLOCK -	2	-
27	581223001	PLATE -	2	-
28	539976988	PIN -	4	-
29	539104763	CLIP -	4	-
30	872110406	BOLT -	1	-
31	539990316	BOLT -	2	-
32	525544001	BOLT -	4	-
33	874780844	BOLT -	2	-
34	525612801	SCREW -	4	-
35	874780520	BOLT -	1	-
36	874490512	BOLT -	4	-
37	576850402	SCREW -	2	-

Ref.	Article N.	Description	Qty	Kit
38	574822701	SCREW -	6	-
39	539112899	NUT, 5/16-18, NYLOC -	1	-
40	539990223	NUT -	4	-
41	539108120	NUT -	4	-
42	539108010	NUT -	2	-
43	539913847	BOLT -	2	-
44	539990717	NUT -	2	-
46	539108732	NUT 3/8-24 HEX JAM ZD -	4	-
47	539990187	WASHER -	2	-
48	819131316	WASHER -	4	-
49	539990692	WASHER -	4	-
50	539127046	NUT -	1	-
50	819111116	WASHER -	4	-
1	510154601	TIRE -	2	-
2	510154501	TIRE -	2	-
3	539105152	TIRE -	2	-
4	510154502	WHEEL RIM -	2	-
5	525611902	FORK -	2	-
6	539105518	SPACER -	4	-
7	510034301	SEAL -	2	-
8	510034403	BEARING -	4	-
9	539101474	NIPPLE	2	-

Ref.	Article N.	Description	Qty	Kit
		-		
10	510034001	CAP -	2	-
11	539105517	BOLT -	2	-
12	521991101	NUT -	2	-
13	522842601	NUT -	2	-
14	539101173	NUT -	8	-
15	539990250	WASHER -	2	-
16	574824701	WASHER -	2	-
18	539105521	WHEEL ASSY *PNEUMATIC*	2	-
1	510246602	DECAL *CONSOLE*	1	-
2	516038101	DECAL *HEIGHT*	1	-
3	525349701	DECAL *HEIGHT*	1	-
4	532424102	DECAL *SPARK ARRESTOR*	1	-
5	532428676	DECAL *CROWN H SM*	1	-
6	532429196	DECAL *HUSQVARNA*	2	-
7	589283001	DECAL *MOTION CONTROL*	2	-
8	539105744	DECAL *BELT DRIVE WARN*	1	-
9	539105745	DECAL *BATTERY WARNING*	1	-
10	539105746	DECAL *SEVERING*	1	-
11	539107959	DECAL *WARNING*	1	-
12	585142601	DECAL *TRACKING*	2	-
13	585148801	DECAL *PARK BRAKE*	1	-

Ref.	Article N.	Description	Qty	Kit
14	574437301	DECAL *BELT ROUTE*	1	-
15	574455001	DECAL *CROWN LG*	1	-
16	574569401	DECAL *FUSE*	1	-
17	574569002	DECAL *ROPS WARNING*	1	-
18	574569006	DECAL *ROPS*	1	-
19	574825901	DECAL *SERVICE*	1	-
20	577150101	DECAL *FUEL VALVE*	1	-
21	581384401	DECAL *PZ 60*	1	-
22	581724301	DECAL *NO STEP*	2	-
23	581724401	DECAL *DEFLECTOR*	1	-
24	584904601	DECAL *BLADE WARNING*	1	-
25	539101881	DECAL *EXHAUST WARNING*	1	-

IGNITION SYSTEM

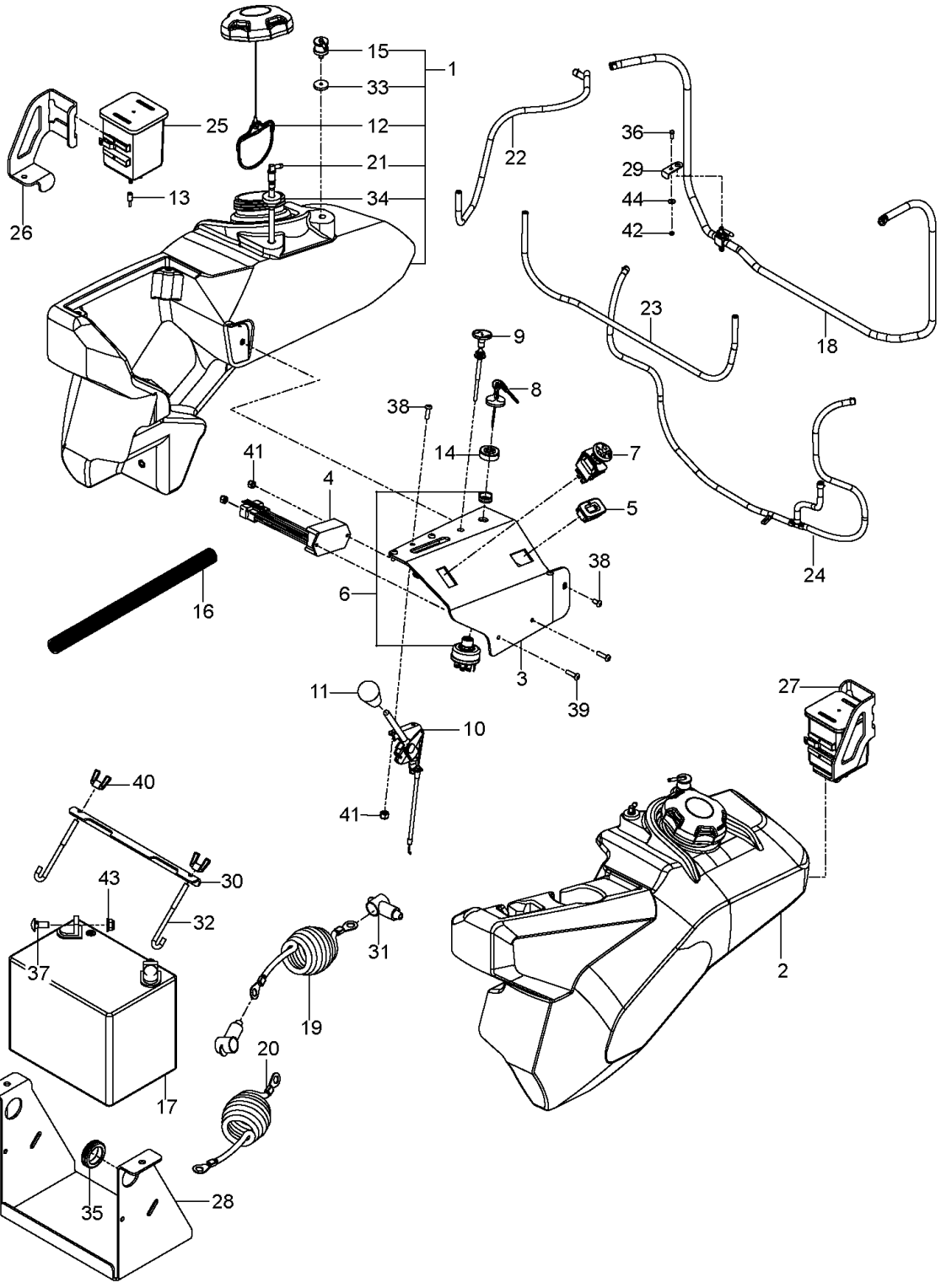

Ref.	Article N.	Description	Qty	Kit
1	510004602	PLATE -	1	-
2	510019801	PULLEY -	1	-
3	525750301	MUFFLER -	1	-

Ref.	Article N.	Description	Qty	Kit
4	525749501	CLUTCH -	1	-
5	522676702	STOP -	1	-
6	539119680	ADAPTER -	1	-
7	539118911	NIPPLE -	1	-
8	539105072	90DEG.ELBOW 3/8NPT -	1	-
9	522837001	PLUG -	1	-
10	587044814	HOSE -	1	-
11	525749901	KEY -	1	-
12	539109618	O-RING -	1	-
13	539912222	CLAMP -	2	-
14	505280001	TIE WRAP -	1	-
15	874780716	BOLT -	1	-
16	581332801	BOLT -	1	-
17	532150406	BOLT -	4	-
18	574233801	SCREW -	3	-
19	872140508	BOLT -	3	-
20	539103153	NUT -	1	-
21	539112899	NUT, 5/16-18, NYLOC -	8	-
22	539102582	NUT -	1	-
23	539990247	WASHER -	1	-
24	539102593	WASHER -	4	-
25	539125626	WASHER	1	-

Ref.	Article N.	Description	Qty	Kit
		-		
26	525554201	HARNESS *NOT SHOWN*	1	-
27	574825801	KIT *SPARK ARRESTOR*	1	-
28	586839701	GASKET -	2	-
1	574482802	FRAME *w/ SAFETY DECALS*	1	-
2	574215602	PLATE *ORG*	1	-
3	574215702	PLATE *ORG*	1	-
4	522675702	BUMPER *ORG*	1	-
5	587898002	GUARD *GRY*	1	-
6	574228602	PLATE *GRY*	1	-
7	577327702	FRAME -	1	-
8	529279603	MOUNT -	1	-
9	529279703	MOUNT -	1	-
10	529279903	MOUNT -	1	-
11	529280003	MOUNT -	1	-
12	510082101	MOUNT -	4	-
13	510083201	MOUNT -	4	-
14	510040301	BRACKET -	2	-
15	539102845	SPRING -	4	-
16	574388001	PIN -	2	-
17	539200715	PIN -	2	-
18	575811501	BUMPER -	2	-

Ref.	Article N.	Description	Qty	Kit
19	522801401	BUMPER -	4	-
20	539102502	STUD -	4	-
21	539109867	CLAMP -	1	-
22	539131780	BOLT -	2	-
23	525544001	BOLT -	2	-
24	874490512	BOLT -	14	-
25	874490632	SCREW -	4	-
26	525612801	SCREW -	4	-
27	574233801	SCREW -	2	-
28	580754601	BOLT -	6	-
29	539100145	BOLT -	2	-
30	817490508	SCREW -	6	-
31	817490516	SCREW -	7	-
32	539111028	NUTSERT 5/16-18 THICK GRIP -	2	-
33	521996501	NUT -	8	-
34	539108120	NUT -	2	-
35	539112899	NUT, 5/16-18, NYLOC -	22	-
36	525829101	NUT -	6	-
37	873800400	NUT -	4	-
38	539102653	WASHER -	6	-
39	539109600	WASHER -	6	-
40	819111116	WASHER	4	-

Ref.	Article N.	Description	Qty	Kit
		-		
41	539111897	WASHER -	4	-
42	576738801	KIT -	1	-
1	506007902	FRAME -	1	-
2	573978301	DRIVE BELT -	1	-
3	576035902	RESERVOIR -	1	-
4	522805401	FILTER -	1	-
5	506120501	PUMP *LT*	1	-
6	506120401	PUMP *RT*	1	-
7	510019002	PULLEY -	2	-
8	510283702	PULLEY -	1	-
9	525435601	PIVOT -	1	-
10	510206301	PIVOT -	1	-
11	510041603	ARM -	1	-
12	522805001	TUBE -	1	-
13	510254501	SHIELD -	1	-
14	539114662	SHIELD, DUST -	1	-
15	574398502	SHIELD -	2	-
16	577437201	SPRING -	1	-
17	576577701	ASSEMBLY -	2	-
18	539101242	ELBOW -	1	-
19	539103316	CONNECTION -	2	-

Ref.	Article N.	Description	Qty	Kit
20	539101239	CONNECTOR -	4	-
21	539101237	CONNECTION -	7	-
22	510013601	LINE -	1	-
23	510013701	LINE -	1	-
24	510013801	LINE -	1	-
25	510013901	LINE -	1	-
26	510014001	LINE -	1	-
27	510014501	LINE -	2	-
28	510010701	LINE -	1	-
29	575872301	HEAD -	1	-
30	522805301	CAP -	1	-
31	539105168	CAP -	1	-
32	539101177	KEY -	2	-
33	872140506	BOLT -	4	-
34	872140610	BOLT -	1	-
35	872140622	BOLT -	1	-
36	872140512	BOLT -	1	-
37	874780844	BOLT -	8	-
38	525544801	SCREW -	4	-
39	525834201	SCREW -	4	-
40	817490516	SCREW -	2	-
41	539990072	SCREW	2	-

Ref.	Article N.	Description	Qty	Kit
		-		
42	539103433	SCREW -	1	-
43	539102717	SCREW -	4	-
44	539990613	NUT -	1	-
45	539112899	NUT, 5/16-18, NYLOC -	5	-
46	521996501	NUT -	4	-
47	539200282	NUT -	4	-
48	521991101	NUT -	5	-
49	539115528	1/2` CONTACT BELLSPR -	1	-
50	522023401	WASHER -	1	-
51	539990052	WASHER -	2	-
52	819182212	WASHER -	1	-
1	584280401	FUEL TANK ASSY -	1	-
2	584280301	FUEL TANK ASSY -	1	-
3	529280202	PANEL -	1	-
4	574514001	TIMER -	1	-
5	586161801	HOUR METER -	1	-
6	574455401	SWITCH -	1	-
7	582107602	SWITCH -	1	-
8	574455501	KEY -	1	-
9	574206901	CABLE -	1	-
10	574207002	CABLE -	1	-

Ref.	Article N.	Description	Qty	Kit
11	539132624	KNOB -	1	-
12	575018101	CAP -	2	-
13	576978701	HUB CAP -	1	-
14	539103178	NUT CAP -	1	-
15	576618101	TANK VENT -	2	-
16	574235301	LOOM -	1	-
17	539102436	BATTERY -	1	-
18	577150501	SERVICE KIT -	1	-
19	522718701	CABLE -	1	-
20	522710701	CABLE -	1	-
21	525865401	TUBE ASSY -	2	-
22	587044533	HOSE -	1	-
23	587044530	HOSE -	1	-
24	587593401	HOSE ASSY -	1	-
25	532414114	FILTER -	2	-
26	576927001	MOUNT -	1	-
27	576926901	MOUNT -	1	-
28	510029902	BRACKET -	1	-
29	577104002	BRACKET -	1	-
30	588107201	BRACKET -	1	-
31	539102759	INSULATOR -	2	-
32	510064001	HOOK	2	-

Ref.	Article N.	Description	Qty	Kit
		-		
33	576618201	GROMMET -	2	-
34	539105245	GROMMET -	2	-
35	539105974	GROMMET -	1	-
36	539990580	SCREW -	1	-
37	872140506	BOLT -	2	-
38	539114341	SCREW -	3	-
39	574822701	SCREW -	4	-
40	539990997	NUT -	2	-
41	539976977	NUT -	4	-
42	539108120	NUT -	1	-
43	539112899	NUT, 5/16-18, NYLOC -	2	-
44	539990598	WASHER -	1	-
45	589670101	HARNESS *NOT SHOWN*	1	-
1	588127602	DECK -	1	-
2	575658403	DRIVE BELT -	1	-
3	539105711	BLADE -	3	-
4	510437502	BAFFLE -	1	-
5	539130646	PULLEY -	3	-
6	510015101	PULLEY -	1	-
7	525598201	PULLEY -	1	-
8	510019601	PULLEY -	1	-

Ref.	Article N.	Description	Qty	Kit
9	574722201	SERVICE KIT -	1	-
10	580943304	SPINDLE -	3	-
11	574169601	ROLLER -	5	-
12	510131202	SHIELD -	2	-
13	510254501	SHIELD -	2	-
14	510262201	SHIELD -	1	-
15	539976998	NIPPLE -	3	-
16	525310901	SPRING -	1	-
17	580942201	HUB -	3	-
18	539130638	BEARING -	6	-
19	510263701	BEARING -	3	-
20	522729701	BEARING -	1	-
21	539104763	CLIP -	8	-
22	574262102	GUIDE -	1	-
23	574262201	KEEPER -	1	-
24	580942501	CARRIER -	3	-
25	574197002	BRACKET -	1	-
26	525486002	BRACKET -	1	-
27	525485801	CHUTE -	1	-
28	580942701	V-RING -	3	-
29	580942301	SPACER -	3	-
30	525465601	SPACER	1	-

Ref.	Article N.	Description	Qty	Kit
		-		
31	574196401	TUBE -	2	-
32	574196501	TUBE -	1	-
33	580942601	SEAL -	6	-
34	539990209	SCREW -	8	-
35	539101686	SCREW -	1	-
36	539130315	BOLT -	9	-
37	574210601	SCREW -	18	-
38	525612801	SCREW -	2	-
39	539131781	BOLT -	2	-
40	874490512	BOLT -	3	-
41	539115620	1/4-20X3/4 CARR BLT -	4	-
42	539128101	BOLT -	1	-
43	574202001	BOLT -	1	-
44	539119007	SCREW -	3	-
45	539107271	SCREW -	1	-
46	510022401	BOLT -	1	-
47	510022301	SCREW -	3	-
48	539102933	SCREW -	3	-
49	539100472	SCREW -	2	-
50	521991101	NUT -	4	-
51	539130653	NUT -	3	-

Ref.	Article N.	Description	Qty	Kit
52	539976978	NUT -	4	-
53	521996501	NUT -	4	-
54	539112899	NUT, 5/16-18, NYLOC -	9	-
55	810030500	WASHER -	8	-
56	539109600	WASHER -	9	-
57	539990692	WASHER -	10	-
58	522023401	WASHER -	1	-
59	539106504	WASHER -	3	-
60	522829301	BLADE *OPTIONAL*	3	-
61	574481301	BLADE *OPTIONAL*	3	-
62	522936601	BLADE *OPTIONAL*	3	-
63	539109755	BLADE *OPTIONAL*	3	-
1	510408502	PLATE -	1	-
2	510408602	PLATE -	1	-
3	525822201	PLATE -	2	-
4	510089801	ROD -	2	-
5	510407601	ROD -	1	-
6	510406301	BAR -	1	-
7	510410703	SHAFT -	2	-
8	510409602	SHAFT -	1	-
9	510023601	SHAFT -	4	-
10	510023902	BLOCK	4	-

Ref.	Article N.	Description	Qty	Kit
		-		
11	510412301	PIVOT -	2	-
12	510407201	LATCH -	1	-
13	510406801	LATCH -	1	-
14	510089401	BUSHING -	4	-
15	510089201	BUSHING -	2	-
16	539916561	MACHINE BUSHING -	1	-
17	510029201	SPRING -	2	-
18	510376601	SPRING -	1	-
19	510376701	SPRING -	1	-
20	510106501	STRUT -	2	-
21	510406601	LINK -	1	-
22	510083801	BALL JOINT -	1	-
23	510407501	SWIVEL -	1	-
24	510406401	SWIVEL -	1	-
25	510362501	SPACER -	4	-
26	510408401	SPACER -	1	-
27	525465501	HEIGHT ADJUSTER -	1	-
27	510022502	ARM -	1	-
28	510410002	ARM -	4	-
29	525465501	HEIGHT ADJUSTER -	3	-
29	510022501	ARM -	1	-

Ref.	Article N.	Description	Qty	Kit
30	539102641	CHAIN -	4	-
31	510089501	PAD -	1	-
32	510406701	GUIDE -	1	-
33	510408301	PEDAL -	1	-
34	510407801	PEDAL -	1	-
35	510406501	CAP -	1	-
36	510090101	PIN -	8	-
37	510016501	PIN -	1	-
38	515988201	PIN -	2	-
39	539120993	EYE BOLT -	2	-
40	525822501	KEY -	4	-
41	539105069	RETAINER RING -	4	-
42	539990870	RING -	1	-
43	522705201	RING -	4	-
44	539101949	RETAINER RING -	2	-
45	539102454	RETAINER RING -	3	-
46	539912730	RING -	1	-
47	539990208	SCREW -	2	-
48	539122728	BOLT -	1	-
49	525828901	BOLT -	2	-
50	525465701	BOLT -	4	-
51	525822101	BOLT	4	-

Ref.	Article N.	Description	Qty	Kit
		-		
52	525612801	SCREW -	2	-
53	525829001	BOLT -	2	-
54	525465401	SCREW -	1	-
55	510408201	BOLT -	1	-
56	516035501	BOLT -	1	-
57	522705601	SCREW -	1	-
58	521996501	NUT -	4	-
59	539991112	NUT -	1	-
60	521991101	NUT -	3	-
61	525829101	NUT -	2	-
62	539990625	NUT -	4	-
63	539108677	NUT 3/4-10 HEX ZD -	2	-
64	539112899	NUT, 5/16-18, NYLOC -	8	-
65	539108732	NUT 3/8-24 HEX JAM ZD -	1	-
66	539990122	WASHER -	1	-
1	574805202	MOTOR *RT*	1	-
2	574805201	MOTOR *LT*	1	-
3	525851201	SHAFT	1	-
4	510025901	ARM	1	-
5	515980002	LEVER	1	-
6	539976526	HANDLE	1	-
7	539133047	CALIPER	2	-
8	525851601	PLATE	2	-
9	525851401	SWIVEL	1	-

Ref.	Article N.	Description	Qty	Kit
10	515980301	LINK	1	-
11	539113952	SPRING	1	-
12	525848701	HUB	2	-
13	539977465	BRACKET	1	-
14	539132161	BLADE BUSHING	6	-
15	510089201	BUSHING	2	-
16	539110631	5/16 DIA ROLL PIN	1	-
17	522705901	PIN	1	-
18	539102889	SPLIT PIN	2	-
19	872140610	BOLT	3	-
20	539923463	HCS 3/8-16 X 3-1/4 GR5 ZD	1	-
21	539104984	SCREW	1	-
22	516035501	BOLT	4	-
23	539108732	NUT 3/8-24 HEX JAM ZD	3	-
24	539115617	NUT	1	-
25	521996501	NUT	1	-
26	539200282	NUT	9	-
27	521991101	NUT	8	-
28	819131316	WASHER	1	-
29	525490901	WASHER	2	-
30	539912063	WASHER	1	-
31	539133007	WASHER	2	-
1	501552801	SEAT -	1	-
2	510039302	PAN -	1	-
3	539119741	SWITCH -	1	-
4	539130359	BELT -	1	-
5	510064101	ROD -	1	-
6	585857402	BRACKET -	1	-
7	520283101	SPRING -	1	-
8	510283801	BUMPER -	2	-
9	539913847	BOLT -	2	-

Ref.	Article N.	Description	Qty	Kit
10	539113226	BOLT -	4	-
11	515990601	BOLT -	2	-
12	525834201	SCREW -	2	-
13	521996501	NUT -	4	-
14	539112899	NUT, 5/16-18, NYLOC -	6	-
1	516020301	DAMPER -	2	-
2	525447901	STRUT -	1	-
3	539113792	SWITCH -	1	-
4	532109553	SWITCH -	2	-
5	539131518	BEARING -	4	-
6	586737202	BRACKET -	2	-
7	501741101	BRACKET -	2	-
8	574269401	LEVER -	2	-
9	577042403	SERVICE KIT -	1	-
10	577042303	SERVICE KIT -	1	-
11	576140302	LEVER -	2	-
12	539109149	CONNECTOR -	4	-
12	539112899	NUT, 5/16-18, NYLOC -	6	-
13	539102590	BALL JOINT -	4	-
14	539102845	SPRING -	1	-
15	539020035	SPRING -	1	-
16	576850301	SPRING	1	-

Ref.	Article N.	Description	Qty	Kit
		-		
17	577252401	SPACER -	2	-
18	511594901	BUSHING -	1	-
19	511595001	LINK -	1	-
20	539110607	STUD -	2	-
21	539130894	GRIP -	2	-
22	575811501	BUMPER -	2	-
23	539131799	KNOB -	1	-
24	522559201	LINKAGE -	2	-
25	522842801	LINKAGE -	2	-
26	581437501	BLOCK -	2	-
27	581223001	PLATE -	2	-
28	539976988	PIN -	4	-
29	539104763	CLIP -	4	-
30	872110406	BOLT -	1	-
31	539990316	BOLT -	2	-
32	525544001	BOLT -	4	-
33	874780844	BOLT -	2	-
34	525612801	SCREW -	4	-
35	874780520	BOLT -	1	-
36	874490512	BOLT -	4	-
37	576850402	SCREW -	2	-

Ref.	Article N.	Description	Qty	Kit
38	574822701	SCREW -	6	-
39	539112899	NUT, 5/16-18, NYLOC -	1	-
40	539990223	NUT -	4	-
41	539108120	NUT -	4	-
42	539108010	NUT -	2	-
43	539913847	BOLT -	2	-
44	539990717	NUT -	2	-
46	539108732	NUT 3/8-24 HEX JAM ZD -	4	-
47	539990187	WASHER -	2	-
48	819131316	WASHER -	4	-
49	539990692	WASHER -	4	-
50	539127046	NUT -	1	-
50	819111116	WASHER -	4	-
1	510154601	TIRE -	2	-
2	510154501	TIRE -	2	-
3	539105152	TIRE -	2	-
4	510154502	WHEEL RIM -	2	-
5	525611902	FORK -	2	-
6	539105518	SPACER -	4	-
7	510034301	SEAL -	2	-
8	510034403	BEARING -	4	-
9	539101474	NIPPLE	2	-

Ref.	Article N.	Description	Qty	Kit
		-		
10	510034001	CAP -	2	-
11	539105517	BOLT -	2	-
12	521991101	NUT -	2	-
13	522842601	NUT -	2	-
14	539101173	NUT -	8	-
15	539990250	WASHER -	2	-
16	574824701	WASHER -	2	-
18	539105521	WHEEL ASSY *PNEUMATIC*	2	-
1	510246602	DECAL *CONSOLE*	1	-
2	516038101	DECAL *HEIGHT*	1	-
3	525349701	DECAL *HEIGHT*	1	-
4	532424102	DECAL *SPARK ARRESTOR*	1	-
5	532428676	DECAL *CROWN H SM*	1	-
6	532429196	DECAL *HUSQVARNA*	2	-
7	589283001	DECAL *MOTION CONTROL*	2	-
8	539105744	DECAL *BELT DRIVE WARN*	1	-
9	539105745	DECAL *BATTERY WARNING*	1	-
10	539105746	DECAL *SEVERING*	1	-
11	539107959	DECAL *WARNING*	1	-
12	585142601	DECAL *TRACKING*	2	-
13	585148801	DECAL *PARK BRAKE*	1	-

Ref.	Article N.	Description	Qty	Kit
14	574437301	DECAL *BELT ROUTE*	1	-
15	574455001	DECAL *CROWN LG*	1	-
16	574569401	DECAL *FUSE*	1	-
17	574569002	DECAL *ROPS WARNING*	1	-
18	574569006	DECAL *ROPS*	1	-
19	574825901	DECAL *SERVICE*	1	-
20	577150101	DECAL *FUEL VALVE*	1	-
21	581384401	DECAL *PZ 60*	1	-
22	581724301	DECAL *NO STEP*	2	-
23	581724401	DECAL *DEFLECTOR*	1	-
24	584904601	DECAL *BLADE WARNING*	1	-
25	539101881	DECAL *EXHAUST WARNING*	1	-

MOWER DECK \/ CUTTING DECK

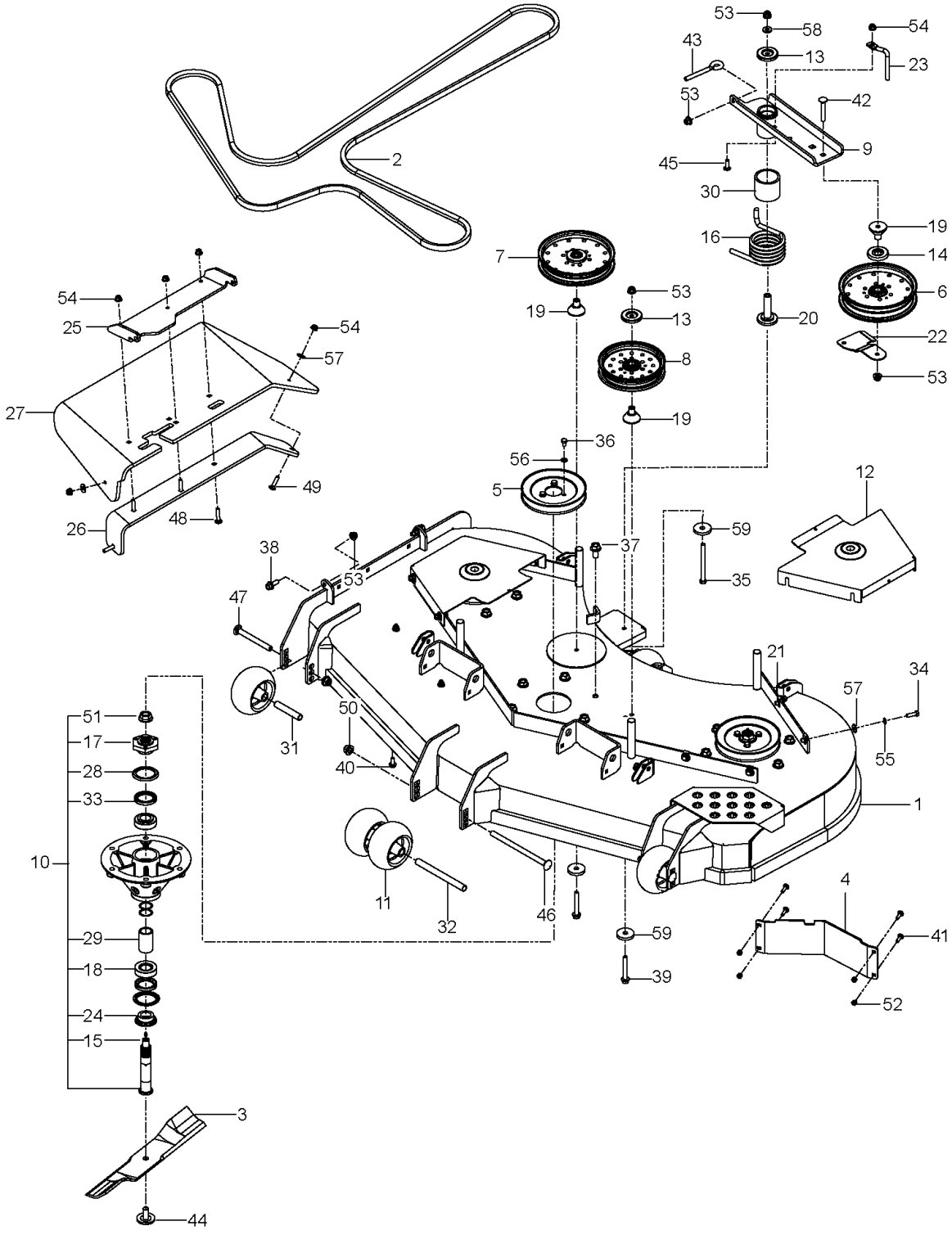

Ref.	Article N.	Description	Qty	Kit
1	510004602	PLATE -	1	-
2	510019801	PULLEY -	1	-
3	525750301	MUFFLER -	1	-

Ref.	Article N.	Description	Qty	Kit
4	525749501	CLUTCH -	1	-
5	522676702	STOP -	1	-
6	539119680	ADAPTER -	1	-
7	539118911	NIPPLE -	1	-
8	539105072	90DEG.ELBOW 3/8NPT -	1	-
9	522837001	PLUG -	1	-
10	587044814	HOSE -	1	-
11	525749901	KEY -	1	-
12	539109618	O-RING -	1	-
13	539912222	CLAMP -	2	-
14	505280001	TIE WRAP -	1	-
15	874780716	BOLT -	1	-
16	581332801	BOLT -	1	-
17	532150406	BOLT -	4	-
18	574233801	SCREW -	3	-
19	872140508	BOLT -	3	-
20	539103153	NUT -	1	-
21	539112899	NUT, 5/16-18, NYLOC -	8	-
22	539102582	NUT -	1	-
23	539990247	WASHER -	1	-
24	539102593	WASHER -	4	-
25	539125626	WASHER	1	-

Ref.	Article N.	Description	Qty	Kit
		-		
26	525554201	HARNESS *NOT SHOWN*	1	-
27	574825801	KIT *SPARK ARRESTOR*	1	-
28	586839701	GASKET -	2	-
1	574482802	FRAME *w/ SAFETY DECALS*	1	-
2	574215602	PLATE *ORG*	1	-
3	574215702	PLATE *ORG*	1	-
4	522675702	BUMPER *ORG*	1	-
5	587898002	GUARD *GRY*	1	-
6	574228602	PLATE *GRY*	1	-
7	577327702	FRAME -	1	-
8	529279603	MOUNT -	1	-
9	529279703	MOUNT -	1	-
10	529279903	MOUNT -	1	-
11	529280003	MOUNT -	1	-
12	510082101	MOUNT -	4	-
13	510083201	MOUNT -	4	-
14	510040301	BRACKET -	2	-
15	539102845	SPRING -	4	-
16	574388001	PIN -	2	-
17	539200715	PIN -	2	-
18	575811501	BUMPER -	2	-

Ref.	Article N.	Description	Qty	Kit
19	522801401	BUMPER -	4	-
20	539102502	STUD -	4	-
21	539109867	CLAMP -	1	-
22	539131780	BOLT -	2	-
23	525544001	BOLT -	2	-
24	874490512	BOLT -	14	-
25	874490632	SCREW -	4	-
26	525612801	SCREW -	4	-
27	574233801	SCREW -	2	-
28	580754601	BOLT -	6	-
29	539100145	BOLT -	2	-
30	817490508	SCREW -	6	-
31	817490516	SCREW -	7	-
32	539111028	NUTSERT 5/16-18 THICK GRIP -	2	-
33	521996501	NUT -	8	-
34	539108120	NUT -	2	-
35	539112899	NUT, 5/16-18, NYLOC -	22	-
36	525829101	NUT -	6	-
37	873800400	NUT -	4	-
38	539102653	WASHER -	6	-
39	539109600	WASHER -	6	-
40	819111116	WASHER	4	-

Ref.	Article N.	Description	Qty	Kit
		-		
41	539111897	WASHER -	4	-
42	576738801	KIT -	1	-
1	506007902	FRAME -	1	-
2	573978301	DRIVE BELT -	1	-
3	576035902	RESERVOIR -	1	-
4	522805401	FILTER -	1	-
5	506120501	PUMP *LT*	1	-
6	506120401	PUMP *RT*	1	-
7	510019002	PULLEY -	2	-
8	510283702	PULLEY -	1	-
9	525435601	PIVOT -	1	-
10	510206301	PIVOT -	1	-
11	510041603	ARM -	1	-
12	522805001	TUBE -	1	-
13	510254501	SHIELD -	1	-
14	539114662	SHIELD, DUST -	1	-
15	574398502	SHIELD -	2	-
16	577437201	SPRING -	1	-
17	576577701	ASSEMBLY -	2	-
18	539101242	ELBOW -	1	-
19	539103316	CONNECTION -	2	-

Ref.	Article N.	Description	Qty	Kit
20	539101239	CONNECTOR -	4	-
21	539101237	CONNECTION -	7	-
22	510013601	LINE -	1	-
23	510013701	LINE -	1	-
24	510013801	LINE -	1	-
25	510013901	LINE -	1	-
26	510014001	LINE -	1	-
27	510014501	LINE -	2	-
28	510010701	LINE -	1	-
29	575872301	HEAD -	1	-
30	522805301	CAP -	1	-
31	539105168	CAP -	1	-
32	539101177	KEY -	2	-
33	872140506	BOLT -	4	-
34	872140610	BOLT -	1	-
35	872140622	BOLT -	1	-
36	872140512	BOLT -	1	-
37	874780844	BOLT -	8	-
38	525544801	SCREW -	4	-
39	525834201	SCREW -	4	-
40	817490516	SCREW -	2	-
41	539990072	SCREW	2	-

Ref.	Article N.	Description	Qty	Kit
		-		
42	539103433	SCREW -	1	-
43	539102717	SCREW -	4	-
44	539990613	NUT -	1	-
45	539112899	NUT, 5/16-18, NYLOC -	5	-
46	521996501	NUT -	4	-
47	539200282	NUT -	4	-
48	521991101	NUT -	5	-
49	539115528	1/2` CONTACT BELLSPR -	1	-
50	522023401	WASHER -	1	-
51	539990052	WASHER -	2	-
52	819182212	WASHER -	1	-
1	584280401	FUEL TANK ASSY -	1	-
2	584280301	FUEL TANK ASSY -	1	-
3	529280202	PANEL -	1	-
4	574514001	TIMER -	1	-
5	586161801	HOUR METER -	1	-
6	574455401	SWITCH -	1	-
7	582107602	SWITCH -	1	-
8	574455501	KEY -	1	-
9	574206901	CABLE -	1	-
10	574207002	CABLE -	1	-

Ref.	Article N.	Description	Qty	Kit
11	539132624	KNOB -	1	-
12	575018101	CAP -	2	-
13	576978701	HUB CAP -	1	-
14	539103178	NUT CAP -	1	-
15	576618101	TANK VENT -	2	-
16	574235301	LOOM -	1	-
17	539102436	BATTERY -	1	-
18	577150501	SERVICE KIT -	1	-
19	522718701	CABLE -	1	-
20	522710701	CABLE -	1	-
21	525865401	TUBE ASSY -	2	-
22	587044533	HOSE -	1	-
23	587044530	HOSE -	1	-
24	587593401	HOSE ASSY -	1	-
25	532414114	FILTER -	2	-
26	576927001	MOUNT -	1	-
27	576926901	MOUNT -	1	-
28	510029902	BRACKET -	1	-
29	577104002	BRACKET -	1	-
30	588107201	BRACKET -	1	-
31	539102759	INSULATOR -	2	-
32	510064001	HOOK	2	-

Ref.	Article N.	Description	Qty	Kit
		-		
33	576618201	GROMMET -	2	-
34	539105245	GROMMET -	2	-
35	539105974	GROMMET -	1	-
36	539990580	SCREW -	1	-
37	872140506	BOLT -	2	-
38	539114341	SCREW -	3	-
39	574822701	SCREW -	4	-
40	539990997	NUT -	2	-
41	539976977	NUT -	4	-
42	539108120	NUT -	1	-
43	539112899	NUT, 5/16-18, NYLOC -	2	-
44	539990598	WASHER -	1	-
45	589670101	HARNESS *NOT SHOWN*	1	-
1	588127602	DECK -	1	-
2	575658403	DRIVE BELT -	1	-
3	539105711	BLADE -	3	-
4	510437502	BAFFLE -	1	-
5	539130646	PULLEY -	3	-
6	510015101	PULLEY -	1	-
7	525598201	PULLEY -	1	-
8	510019601	PULLEY -	1	-

Ref.	Article N.	Description	Qty	Kit
9	574722201	SERVICE KIT -	1	-
10	580943304	SPINDLE -	3	-
11	574169601	ROLLER -	5	-
12	510131202	SHIELD -	2	-
13	510254501	SHIELD -	2	-
14	510262201	SHIELD -	1	-
15	539976998	NIPPLE -	3	-
16	525310901	SPRING -	1	-
17	580942201	HUB -	3	-
18	539130638	BEARING -	6	-
19	510263701	BEARING -	3	-
20	522729701	BEARING -	1	-
21	539104763	CLIP -	8	-
22	574262102	GUIDE -	1	-
23	574262201	KEEPER -	1	-
24	580942501	CARRIER -	3	-
25	574197002	BRACKET -	1	-
26	525486002	BRACKET -	1	-
27	525485801	CHUTE -	1	-
28	580942701	V-RING -	3	-
29	580942301	SPACER -	3	-
30	525465601	SPACER	1	-

Ref.	Article N.	Description	Qty	Kit
		-		
31	574196401	TUBE -	2	-
32	574196501	TUBE -	1	-
33	580942601	SEAL -	6	-
34	539990209	SCREW -	8	-
35	539101686	SCREW -	1	-
36	539130315	BOLT -	9	-
37	574210601	SCREW -	18	-
38	525612801	SCREW -	2	-
39	539131781	BOLT -	2	-
40	874490512	BOLT -	3	-
41	539115620	1/4-20X3/4 CARR BLT -	4	-
42	539128101	BOLT -	1	-
43	574202001	BOLT -	1	-
44	539119007	SCREW -	3	-
45	539107271	SCREW -	1	-
46	510022401	BOLT -	1	-
47	510022301	SCREW -	3	-
48	539102933	SCREW -	3	-
49	539100472	SCREW -	2	-
50	521991101	NUT -	4	-
51	539130653	NUT -	3	-

Ref.	Article N.	Description	Qty	Kit
52	539976978	NUT -	4	-
53	521996501	NUT -	4	-
54	539112899	NUT, 5/16-18, NYLOC -	9	-
55	810030500	WASHER -	8	-
56	539109600	WASHER -	9	-
57	539990692	WASHER -	10	-
58	522023401	WASHER -	1	-
59	539106504	WASHER -	3	-
60	522829301	BLADE *OPTIONAL*	3	-
61	574481301	BLADE *OPTIONAL*	3	-
62	522936601	BLADE *OPTIONAL*	3	-
63	539109755	BLADE *OPTIONAL*	3	-
1	510408502	PLATE -	1	-
2	510408602	PLATE -	1	-
3	525822201	PLATE -	2	-
4	510089801	ROD -	2	-
5	510407601	ROD -	1	-
6	510406301	BAR -	1	-
7	510410703	SHAFT -	2	-
8	510409602	SHAFT -	1	-
9	510023601	SHAFT -	4	-
10	510023902	BLOCK	4	-

Ref.	Article N.	Description	Qty	Kit
		-		
11	510412301	PIVOT -	2	-
12	510407201	LATCH -	1	-
13	510406801	LATCH -	1	-
14	510089401	BUSHING -	4	-
15	510089201	BUSHING -	2	-
16	539916561	MACHINE BUSHING -	1	-
17	510029201	SPRING -	2	-
18	510376601	SPRING -	1	-
19	510376701	SPRING -	1	-
20	510106501	STRUT -	2	-
21	510406601	LINK -	1	-
22	510083801	BALL JOINT -	1	-
23	510407501	SWIVEL -	1	-
24	510406401	SWIVEL -	1	-
25	510362501	SPACER -	4	-
26	510408401	SPACER -	1	-
27	525465501	HEIGHT ADJUSTER -	1	-
27	510022502	ARM -	1	-
28	510410002	ARM -	4	-
29	525465501	HEIGHT ADJUSTER -	3	-
29	510022501	ARM -	1	-

Ref.	Article N.	Description	Qty	Kit
30	539102641	CHAIN -	4	-
31	510089501	PAD -	1	-
32	510406701	GUIDE -	1	-
33	510408301	PEDAL -	1	-
34	510407801	PEDAL -	1	-
35	510406501	CAP -	1	-
36	510090101	PIN -	8	-
37	510016501	PIN -	1	-
38	515988201	PIN -	2	-
39	539120993	EYE BOLT -	2	-
40	525822501	KEY -	4	-
41	539105069	RETAINER RING -	4	-
42	539990870	RING -	1	-
43	522705201	RING -	4	-
44	539101949	RETAINER RING -	2	-
45	539102454	RETAINER RING -	3	-
46	539912730	RING -	1	-
47	539990208	SCREW -	2	-
48	539122728	BOLT -	1	-
49	525828901	BOLT -	2	-
50	525465701	BOLT -	4	-
51	525822101	BOLT	4	-

Ref.	Article N.	Description	Qty	Kit
		-		
52	525612801	SCREW -	2	-
53	525829001	BOLT -	2	-
54	525465401	SCREW -	1	-
55	510408201	BOLT -	1	-
56	516035501	BOLT -	1	-
57	522705601	SCREW -	1	-
58	521996501	NUT -	4	-
59	539991112	NUT -	1	-
60	521991101	NUT -	3	-
61	525829101	NUT -	2	-
62	539990625	NUT -	4	-
63	539108677	NUT 3/4-10 HEX ZD -	2	-
64	539112899	NUT, 5/16-18, NYLOC -	8	-
65	539108732	NUT 3/8-24 HEX JAM ZD -	1	-
66	539990122	WASHER -	1	-
1	574805202	MOTOR *RT*	1	-
2	574805201	MOTOR *LT*	1	-
3	525851201	SHAFT	1	-
4	510025901	ARM	1	-
5	515980002	LEVER	1	-
6	539976526	HANDLE	1	-
7	539133047	CALIPER	2	-
8	525851601	PLATE	2	-
9	525851401	SWIVEL	1	-

Ref.	Article N.	Description	Qty	Kit
10	515980301	LINK	1	-
11	539113952	SPRING	1	-
12	525848701	HUB	2	-
13	539977465	BRACKET	1	-
14	539132161	BLADE BUSHING	6	-
15	510089201	BUSHING	2	-
16	539110631	5/16 DIA ROLL PIN	1	-
17	522705901	PIN	1	-
18	539102889	SPLIT PIN	2	-
19	872140610	BOLT	3	-
20	539923463	HCS 3/8-16 X 3-1/4 GR5 ZD	1	-
21	539104984	SCREW	1	-
22	516035501	BOLT	4	-
23	539108732	NUT 3/8-24 HEX JAM ZD	3	-
24	539115617	NUT	1	-
25	521996501	NUT	1	-
26	539200282	NUT	9	-
27	521991101	NUT	8	-
28	819131316	WASHER	1	-
29	525490901	WASHER	2	-
30	539912063	WASHER	1	-
31	539133007	WASHER	2	-
1	501552801	SEAT -	1	-
2	510039302	PAN -	1	-
3	539119741	SWITCH -	1	-
4	539130359	BELT -	1	-
5	510064101	ROD -	1	-
6	585857402	BRACKET -	1	-
7	520283101	SPRING -	1	-
8	510283801	BUMPER -	2	-
9	539913847	BOLT -	2	-

Ref.	Article N.	Description	Qty	Kit
10	539113226	BOLT -	4	-
11	515990601	BOLT -	2	-
12	525834201	SCREW -	2	-
13	521996501	NUT -	4	-
14	539112899	NUT, 5/16-18, NYLOC -	6	-
1	516020301	DAMPER -	2	-
2	525447901	STRUT -	1	-
3	539113792	SWITCH -	1	-
4	532109553	SWITCH -	2	-
5	539131518	BEARING -	4	-
6	586737202	BRACKET -	2	-
7	501741101	BRACKET -	2	-
8	574269401	LEVER -	2	-
9	577042403	SERVICE KIT -	1	-
10	577042303	SERVICE KIT -	1	-
11	576140302	LEVER -	2	-
12	539109149	CONNECTOR -	4	-
12	539112899	NUT, 5/16-18, NYLOC -	6	-
13	539102590	BALL JOINT -	4	-
14	539102845	SPRING -	1	-
15	539020035	SPRING -	1	-
16	576850301	SPRING	1	-

Ref.	Article N.	Description	Qty	Kit
		-		
17	577252401	SPACER -	2	-
18	511594901	BUSHING -	1	-
19	511595001	LINK -	1	-
20	539110607	STUD -	2	-
21	539130894	GRIP -	2	-
22	575811501	BUMPER -	2	-
23	539131799	KNOB -	1	-
24	522559201	LINKAGE -	2	-
25	522842801	LINKAGE -	2	-
26	581437501	BLOCK -	2	-
27	581223001	PLATE -	2	-
28	539976988	PIN -	4	-
29	539104763	CLIP -	4	-
30	872110406	BOLT -	1	-
31	539990316	BOLT -	2	-
32	525544001	BOLT -	4	-
33	874780844	BOLT -	2	-
34	525612801	SCREW -	4	-
35	874780520	BOLT -	1	-
36	874490512	BOLT -	4	-
37	576850402	SCREW -	2	-

Ref.	Article N.	Description	Qty	Kit
38	574822701	SCREW -	6	-
39	539112899	NUT, 5/16-18, NYLOC -	1	-
40	539990223	NUT -	4	-
41	539108120	NUT -	4	-
42	539108010	NUT -	2	-
43	539913847	BOLT -	2	-
44	539990717	NUT -	2	-
46	539108732	NUT 3/8-24 HEX JAM ZD -	4	-
47	539990187	WASHER -	2	-
48	819131316	WASHER -	4	-
49	539990692	WASHER -	4	-
50	539127046	NUT -	1	-
50	819111116	WASHER -	4	-
1	510154601	TIRE -	2	-
2	510154501	TIRE -	2	-
3	539105152	TIRE -	2	-
4	510154502	WHEEL RIM -	2	-
5	525611902	FORK -	2	-
6	539105518	SPACER -	4	-
7	510034301	SEAL -	2	-
8	510034403	BEARING -	4	-
9	539101474	NIPPLE	2	-

Ref.	Article N.	Description	Qty	Kit
		-		
10	510034001	CAP -	2	-
11	539105517	BOLT -	2	-
12	521991101	NUT -	2	-
13	522842601	NUT -	2	-
14	539101173	NUT -	8	-
15	539990250	WASHER -	2	-
16	574824701	WASHER -	2	-
18	539105521	WHEEL ASSY *PNEUMATIC*	2	-
1	510246602	DECAL *CONSOLE*	1	-
2	516038101	DECAL *HEIGHT*	1	-
3	525349701	DECAL *HEIGHT*	1	-
4	532424102	DECAL *SPARK ARRESTOR*	1	-
5	532428676	DECAL *CROWN H SM*	1	-
6	532429196	DECAL *HUSQVARNA*	2	-
7	589283001	DECAL *MOTION CONTROL*	2	-
8	539105744	DECAL *BELT DRIVE WARN*	1	-
9	539105745	DECAL *BATTERY WARNING*	1	-
10	539105746	DECAL *SEVERING*	1	-
11	539107959	DECAL *WARNING*	1	-
12	585142601	DECAL *TRACKING*	2	-
13	585148801	DECAL *PARK BRAKE*	1	-

Ref.	Article N.	Description	Qty	Kit
14	574437301	DECAL *BELT ROUTE*	1	-
15	574455001	DECAL *CROWN LG*	1	-
16	574569401	DECAL *FUSE*	1	-
17	574569002	DECAL *ROPS WARNING*	1	-
18	574569006	DECAL *ROPS*	1	-
19	574825901	DECAL *SERVICE*	1	-
20	577150101	DECAL *FUEL VALVE*	1	-
21	581384401	DECAL *PZ 60*	1	-
22	581724301	DECAL *NO STEP*	2	-
23	581724401	DECAL *DEFLECTOR*	1	-
24	584904601	DECAL *BLADE WARNING*	1	-
25	539101881	DECAL *EXHAUST WARNING*	1	-

MOWER LIFT \/ DECK LIFT

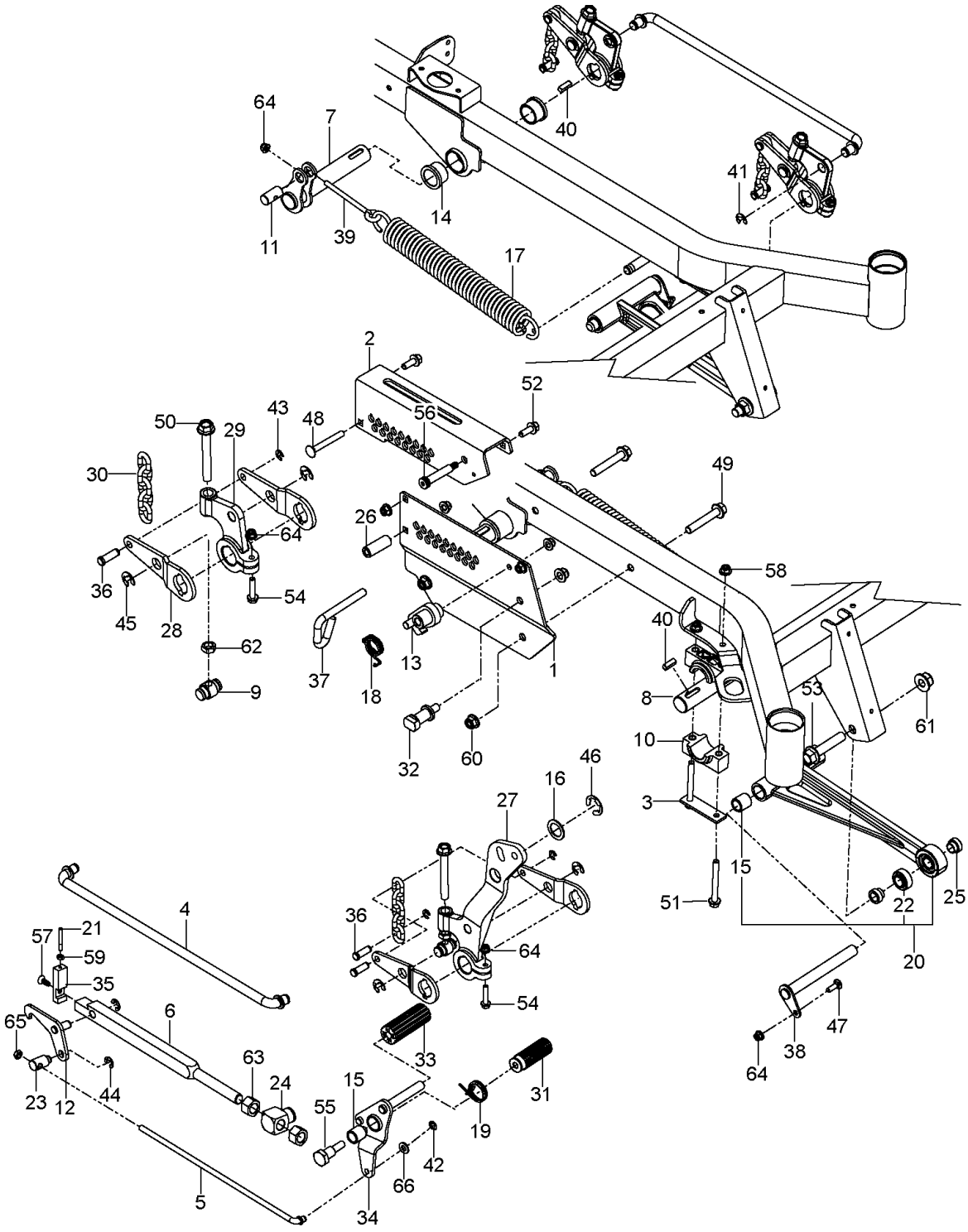

Ref.	Article N.	Description	Qty	Kit
1	510004602	PLATE -	1	-
2	510019801	PULLEY -	1	-
3	525750301	MUFFLER -	1	-

Ref.	Article N.	Description	Qty	Kit
4	525749501	CLUTCH -	1	-
5	522676702	STOP -	1	-
6	539119680	ADAPTER -	1	-
7	539118911	NIPPLE -	1	-
8	539105072	90DEG.ELBOW 3/8NPT -	1	-
9	522837001	PLUG -	1	-
10	587044814	HOSE -	1	-
11	525749901	KEY -	1	-
12	539109618	O-RING -	1	-
13	539912222	CLAMP -	2	-
14	505280001	TIE WRAP -	1	-
15	874780716	BOLT -	1	-
16	581332801	BOLT -	1	-
17	532150406	BOLT -	4	-
18	574233801	SCREW -	3	-
19	872140508	BOLT -	3	-
20	539103153	NUT -	1	-
21	539112899	NUT, 5/16-18, NYLOC -	8	-
22	539102582	NUT -	1	-
23	539990247	WASHER -	1	-
24	539102593	WASHER -	4	-
25	539125626	WASHER	1	-

Ref.	Article N.	Description	Qty	Kit
		-		
26	525554201	HARNESS *NOT SHOWN*	1	-
27	574825801	KIT *SPARK ARRESTOR*	1	-
28	586839701	GASKET -	2	-
1	574482802	FRAME *w/ SAFETY DECALS*	1	-
2	574215602	PLATE *ORG*	1	-
3	574215702	PLATE *ORG*	1	-
4	522675702	BUMPER *ORG*	1	-
5	587898002	GUARD *GRY*	1	-
6	574228602	PLATE *GRY*	1	-
7	577327702	FRAME -	1	-
8	529279603	MOUNT -	1	-
9	529279703	MOUNT -	1	-
10	529279903	MOUNT -	1	-
11	529280003	MOUNT -	1	-
12	510082101	MOUNT -	4	-
13	510083201	MOUNT -	4	-
14	510040301	BRACKET -	2	-
15	539102845	SPRING -	4	-
16	574388001	PIN -	2	-
17	539200715	PIN -	2	-
18	575811501	BUMPER -	2	-

Ref.	Article N.	Description	Qty	Kit
19	522801401	BUMPER -	4	-
20	539102502	STUD -	4	-
21	539109867	CLAMP -	1	-
22	539131780	BOLT -	2	-
23	525544001	BOLT -	2	-
24	874490512	BOLT -	14	-
25	874490632	SCREW -	4	-
26	525612801	SCREW -	4	-
27	574233801	SCREW -	2	-
28	580754601	BOLT -	6	-
29	539100145	BOLT -	2	-
30	817490508	SCREW -	6	-
31	817490516	SCREW -	7	-
32	539111028	NUTSERT 5/16-18 THICK GRIP -	2	-
33	521996501	NUT -	8	-
34	539108120	NUT -	2	-
35	539112899	NUT, 5/16-18, NYLOC -	22	-
36	525829101	NUT -	6	-
37	873800400	NUT -	4	-
38	539102653	WASHER -	6	-
39	539109600	WASHER -	6	-
40	819111116	WASHER	4	-

Ref.	Article N.	Description	Qty	Kit
		-		
41	539111897	WASHER -	4	-
42	576738801	KIT -	1	-
1	506007902	FRAME -	1	-
2	573978301	DRIVE BELT -	1	-
3	576035902	RESERVOIR -	1	-
4	522805401	FILTER -	1	-
5	506120501	PUMP *LT*	1	-
6	506120401	PUMP *RT*	1	-
7	510019002	PULLEY -	2	-
8	510283702	PULLEY -	1	-
9	525435601	PIVOT -	1	-
10	510206301	PIVOT -	1	-
11	510041603	ARM -	1	-
12	522805001	TUBE -	1	-
13	510254501	SHIELD -	1	-
14	539114662	SHIELD, DUST -	1	-
15	574398502	SHIELD -	2	-
16	577437201	SPRING -	1	-
17	576577701	ASSEMBLY -	2	-
18	539101242	ELBOW -	1	-
19	539103316	CONNECTION -	2	-

Ref.	Article N.	Description	Qty	Kit
20	539101239	CONNECTOR -	4	-
21	539101237	CONNECTION -	7	-
22	510013601	LINE -	1	-
23	510013701	LINE -	1	-
24	510013801	LINE -	1	-
25	510013901	LINE -	1	-
26	510014001	LINE -	1	-
27	510014501	LINE -	2	-
28	510010701	LINE -	1	-
29	575872301	HEAD -	1	-
30	522805301	CAP -	1	-
31	539105168	CAP -	1	-
32	539101177	KEY -	2	-
33	872140506	BOLT -	4	-
34	872140610	BOLT -	1	-
35	872140622	BOLT -	1	-
36	872140512	BOLT -	1	-
37	874780844	BOLT -	8	-
38	525544801	SCREW -	4	-
39	525834201	SCREW -	4	-
40	817490516	SCREW -	2	-
41	539990072	SCREW	2	-

Ref.	Article N.	Description	Qty	Kit
		-		
42	539103433	SCREW -	1	-
43	539102717	SCREW -	4	-
44	539990613	NUT -	1	-
45	539112899	NUT, 5/16-18, NYLOC -	5	-
46	521996501	NUT -	4	-
47	539200282	NUT -	4	-
48	521991101	NUT -	5	-
49	539115528	1/2` CONTACT BELLSPR -	1	-
50	522023401	WASHER -	1	-
51	539990052	WASHER -	2	-
52	819182212	WASHER -	1	-
1	584280401	FUEL TANK ASSY -	1	-
2	584280301	FUEL TANK ASSY -	1	-
3	529280202	PANEL -	1	-
4	574514001	TIMER -	1	-
5	586161801	HOUR METER -	1	-
6	574455401	SWITCH -	1	-
7	582107602	SWITCH -	1	-
8	574455501	KEY -	1	-
9	574206901	CABLE -	1	-
10	574207002	CABLE -	1	-

Ref.	Article N.	Description	Qty	Kit
11	539132624	KNOB -	1	-
12	575018101	CAP -	2	-
13	576978701	HUB CAP -	1	-
14	539103178	NUT CAP -	1	-
15	576618101	TANK VENT -	2	-
16	574235301	LOOM -	1	-
17	539102436	BATTERY -	1	-
18	577150501	SERVICE KIT -	1	-
19	522718701	CABLE -	1	-
20	522710701	CABLE -	1	-
21	525865401	TUBE ASSY -	2	-
22	587044533	HOSE -	1	-
23	587044530	HOSE -	1	-
24	587593401	HOSE ASSY -	1	-
25	532414114	FILTER -	2	-
26	576927001	MOUNT -	1	-
27	576926901	MOUNT -	1	-
28	510029902	BRACKET -	1	-
29	577104002	BRACKET -	1	-
30	588107201	BRACKET -	1	-
31	539102759	INSULATOR -	2	-
32	510064001	HOOK	2	-

Ref.	Article N.	Description	Qty	Kit
		-		
33	576618201	GROMMET -	2	-
34	539105245	GROMMET -	2	-
35	539105974	GROMMET -	1	-
36	539990580	SCREW -	1	-
37	872140506	BOLT -	2	-
38	539114341	SCREW -	3	-
39	574822701	SCREW -	4	-
40	539990997	NUT -	2	-
41	539976977	NUT -	4	-
42	539108120	NUT -	1	-
43	539112899	NUT, 5/16-18, NYLOC -	2	-
44	539990598	WASHER -	1	-
45	589670101	HARNESS *NOT SHOWN*	1	-
1	588127602	DECK -	1	-
2	575658403	DRIVE BELT -	1	-
3	539105711	BLADE -	3	-
4	510437502	BAFFLE -	1	-
5	539130646	PULLEY -	3	-
6	510015101	PULLEY -	1	-
7	525598201	PULLEY -	1	-
8	510019601	PULLEY -	1	-

Ref.	Article N.	Description	Qty	Kit
9	574722201	SERVICE KIT -	1	-
10	580943304	SPINDLE -	3	-
11	574169601	ROLLER -	5	-
12	510131202	SHIELD -	2	-
13	510254501	SHIELD -	2	-
14	510262201	SHIELD -	1	-
15	539976998	NIPPLE -	3	-
16	525310901	SPRING -	1	-
17	580942201	HUB -	3	-
18	539130638	BEARING -	6	-
19	510263701	BEARING -	3	-
20	522729701	BEARING -	1	-
21	539104763	CLIP -	8	-
22	574262102	GUIDE -	1	-
23	574262201	KEEPER -	1	-
24	580942501	CARRIER -	3	-
25	574197002	BRACKET -	1	-
26	525486002	BRACKET -	1	-
27	525485801	CHUTE -	1	-
28	580942701	V-RING -	3	-
29	580942301	SPACER -	3	-
30	525465601	SPACER	1	-

Ref.	Article N.	Description	Qty	Kit
		-		
31	574196401	TUBE -	2	-
32	574196501	TUBE -	1	-
33	580942601	SEAL -	6	-
34	539990209	SCREW -	8	-
35	539101686	SCREW -	1	-
36	539130315	BOLT -	9	-
37	574210601	SCREW -	18	-
38	525612801	SCREW -	2	-
39	539131781	BOLT -	2	-
40	874490512	BOLT -	3	-
41	539115620	1/4-20X3/4 CARR BLT -	4	-
42	539128101	BOLT -	1	-
43	574202001	BOLT -	1	-
44	539119007	SCREW -	3	-
45	539107271	SCREW -	1	-
46	510022401	BOLT -	1	-
47	510022301	SCREW -	3	-
48	539102933	SCREW -	3	-
49	539100472	SCREW -	2	-
50	521991101	NUT -	4	-
51	539130653	NUT -	3	-

Ref.	Article N.	Description	Qty	Kit
52	539976978	NUT -	4	-
53	521996501	NUT -	4	-
54	539112899	NUT, 5/16-18, NYLOC -	9	-
55	810030500	WASHER -	8	-
56	539109600	WASHER -	9	-
57	539990692	WASHER -	10	-
58	522023401	WASHER -	1	-
59	539106504	WASHER -	3	-
60	522829301	BLADE *OPTIONAL*	3	-
61	574481301	BLADE *OPTIONAL*	3	-
62	522936601	BLADE *OPTIONAL*	3	-
63	539109755	BLADE *OPTIONAL*	3	-
1	510408502	PLATE -	1	-
2	510408602	PLATE -	1	-
3	525822201	PLATE -	2	-
4	510089801	ROD -	2	-
5	510407601	ROD -	1	-
6	510406301	BAR -	1	-
7	510410703	SHAFT -	2	-
8	510409602	SHAFT -	1	-
9	510023601	SHAFT -	4	-
10	510023902	BLOCK	4	-

Ref.	Article N.	Description	Qty	Kit
		-		
11	510412301	PIVOT -	2	-
12	510407201	LATCH -	1	-
13	510406801	LATCH -	1	-
14	510089401	BUSHING -	4	-
15	510089201	BUSHING -	2	-
16	539916561	MACHINE BUSHING -	1	-
17	510029201	SPRING -	2	-
18	510376601	SPRING -	1	-
19	510376701	SPRING -	1	-
20	510106501	STRUT -	2	-
21	510406601	LINK -	1	-
22	510083801	BALL JOINT -	1	-
23	510407501	SWIVEL -	1	-
24	510406401	SWIVEL -	1	-
25	510362501	SPACER -	4	-
26	510408401	SPACER -	1	-
27	525465501	HEIGHT ADJUSTER -	1	-
27	510022502	ARM -	1	-
28	510410002	ARM -	4	-
29	525465501	HEIGHT ADJUSTER -	3	-
29	510022501	ARM -	1	-

Ref.	Article N.	Description	Qty	Kit
30	539102641	CHAIN -	4	-
31	510089501	PAD -	1	-
32	510406701	GUIDE -	1	-
33	510408301	PEDAL -	1	-
34	510407801	PEDAL -	1	-
35	510406501	CAP -	1	-
36	510090101	PIN -	8	-
37	510016501	PIN -	1	-
38	515988201	PIN -	2	-
39	539120993	EYE BOLT -	2	-
40	525822501	KEY -	4	-
41	539105069	RETAINER RING -	4	-
42	539990870	RING -	1	-
43	522705201	RING -	4	-
44	539101949	RETAINER RING -	2	-
45	539102454	RETAINER RING -	3	-
46	539912730	RING -	1	-
47	539990208	SCREW -	2	-
48	539122728	BOLT -	1	-
49	525828901	BOLT -	2	-
50	525465701	BOLT -	4	-
51	525822101	BOLT	4	-

Ref.	Article N.	Description	Qty	Kit
		-		
52	525612801	SCREW -	2	-
53	525829001	BOLT -	2	-
54	525465401	SCREW -	1	-
55	510408201	BOLT -	1	-
56	516035501	BOLT -	1	-
57	522705601	SCREW -	1	-
58	521996501	NUT -	4	-
59	539991112	NUT -	1	-
60	521991101	NUT -	3	-
61	525829101	NUT -	2	-
62	539990625	NUT -	4	-
63	539108677	NUT 3/4-10 HEX ZD -	2	-
64	539112899	NUT, 5/16-18, NYLOC -	8	-
65	539108732	NUT 3/8-24 HEX JAM ZD -	1	-
66	539990122	WASHER -	1	-
1	574805202	MOTOR *RT*	1	-
2	574805201	MOTOR *LT*	1	-
3	525851201	SHAFT	1	-
4	510025901	ARM	1	-
5	515980002	LEVER	1	-
6	539976526	HANDLE	1	-
7	539133047	CALIPER	2	-
8	525851601	PLATE	2	-
9	525851401	SWIVEL	1	-

Ref.	Article N.	Description	Qty	Kit
10	515980301	LINK	1	-
11	539113952	SPRING	1	-
12	525848701	HUB	2	-
13	539977465	BRACKET	1	-
14	539132161	BLADE BUSHING	6	-
15	510089201	BUSHING	2	-
16	539110631	5/16 DIA ROLL PIN	1	-
17	522705901	PIN	1	-
18	539102889	SPLIT PIN	2	-
19	872140610	BOLT	3	-
20	539923463	HCS 3/8-16 X 3-1/4 GR5 ZD	1	-
21	539104984	SCREW	1	-
22	516035501	BOLT	4	-
23	539108732	NUT 3/8-24 HEX JAM ZD	3	-
24	539115617	NUT	1	-
25	521996501	NUT	1	-
26	539200282	NUT	9	-
27	521991101	NUT	8	-
28	819131316	WASHER	1	-
29	525490901	WASHER	2	-
30	539912063	WASHER	1	-
31	539133007	WASHER	2	-
1	501552801	SEAT -	1	-
2	510039302	PAN -	1	-
3	539119741	SWITCH -	1	-
4	539130359	BELT -	1	-
5	510064101	ROD -	1	-
6	585857402	BRACKET -	1	-
7	520283101	SPRING -	1	-
8	510283801	BUMPER -	2	-
9	539913847	BOLT -	2	-

Ref.	Article N.	Description	Qty	Kit
10	539113226	BOLT -	4	-
11	515990601	BOLT -	2	-
12	525834201	SCREW -	2	-
13	521996501	NUT -	4	-
14	539112899	NUT, 5/16-18, NYLOC -	6	-
1	516020301	DAMPER -	2	-
2	525447901	STRUT -	1	-
3	539113792	SWITCH -	1	-
4	532109553	SWITCH -	2	-
5	539131518	BEARING -	4	-
6	586737202	BRACKET -	2	-
7	501741101	BRACKET -	2	-
8	574269401	LEVER -	2	-
9	577042403	SERVICE KIT -	1	-
10	577042303	SERVICE KIT -	1	-
11	576140302	LEVER -	2	-
12	539109149	CONNECTOR -	4	-
12	539112899	NUT, 5/16-18, NYLOC -	6	-
13	539102590	BALL JOINT -	4	-
14	539102845	SPRING -	1	-
15	539020035	SPRING -	1	-
16	576850301	SPRING	1	-

Ref.	Article N.	Description	Qty	Kit
		-		
17	577252401	SPACER -	2	-
18	511594901	BUSHING -	1	-
19	511595001	LINK -	1	-
20	539110607	STUD -	2	-
21	539130894	GRIP -	2	-
22	575811501	BUMPER -	2	-
23	539131799	KNOB -	1	-
24	522559201	LINKAGE -	2	-
25	522842801	LINKAGE -	2	-
26	581437501	BLOCK -	2	-
27	581223001	PLATE -	2	-
28	539976988	PIN -	4	-
29	539104763	CLIP -	4	-
30	872110406	BOLT -	1	-
31	539990316	BOLT -	2	-
32	525544001	BOLT -	4	-
33	874780844	BOLT -	2	-
34	525612801	SCREW -	4	-
35	874780520	BOLT -	1	-
36	874490512	BOLT -	4	-
37	576850402	SCREW -	2	-

Ref.	Article N.	Description	Qty	Kit
38	574822701	SCREW -	6	-
39	539112899	NUT, 5/16-18, NYLOC -	1	-
40	539990223	NUT -	4	-
41	539108120	NUT -	4	-
42	539108010	NUT -	2	-
43	539913847	BOLT -	2	-
44	539990717	NUT -	2	-
46	539108732	NUT 3/8-24 HEX JAM ZD -	4	-
47	539990187	WASHER -	2	-
48	819131316	WASHER -	4	-
49	539990692	WASHER -	4	-
50	539127046	NUT -	1	-
50	819111116	WASHER -	4	-
1	510154601	TIRE -	2	-
2	510154501	TIRE -	2	-
3	539105152	TIRE -	2	-
4	510154502	WHEEL RIM -	2	-
5	525611902	FORK -	2	-
6	539105518	SPACER -	4	-
7	510034301	SEAL -	2	-
8	510034403	BEARING -	4	-
9	539101474	NIPPLE	2	-

Ref.	Article N.	Description	Qty	Kit
		-		
10	510034001	CAP -	2	-
11	539105517	BOLT -	2	-
12	521991101	NUT -	2	-
13	522842601	NUT -	2	-
14	539101173	NUT -	8	-
15	539990250	WASHER -	2	-
16	574824701	WASHER -	2	-
18	539105521	WHEEL ASSY *PNEUMATIC*	2	-
1	510246602	DECAL *CONSOLE*	1	-
2	516038101	DECAL *HEIGHT*	1	-
3	525349701	DECAL *HEIGHT*	1	-
4	532424102	DECAL *SPARK ARRESTOR*	1	-
5	532428676	DECAL *CROWN H SM*	1	-
6	532429196	DECAL *HUSQVARNA*	2	-
7	589283001	DECAL *MOTION CONTROL*	2	-
8	539105744	DECAL *BELT DRIVE WARN*	1	-
9	539105745	DECAL *BATTERY WARNING*	1	-
10	539105746	DECAL *SEVERING*	1	-
11	539107959	DECAL *WARNING*	1	-
12	585142601	DECAL *TRACKING*	2	-
13	585148801	DECAL *PARK BRAKE*	1	-

Ref.	Article N.	Description	Qty	Kit
14	574437301	DECAL *BELT ROUTE*	1	-
15	574455001	DECAL *CROWN LG*	1	-
16	574569401	DECAL *FUSE*	1	-
17	574569002	DECAL *ROPS WARNING*	1	-
18	574569006	DECAL *ROPS*	1	-
19	574825901	DECAL *SERVICE*	1	-
20	577150101	DECAL *FUEL VALVE*	1	-
21	581384401	DECAL *PZ 60*	1	-
22	581724301	DECAL *NO STEP*	2	-
23	581724401	DECAL *DEFLECTOR*	1	-
24	584904601	DECAL *BLADE WARNING*	1	-
25	539101881	DECAL *EXHAUST WARNING*	1	-

PARKING BRAKE

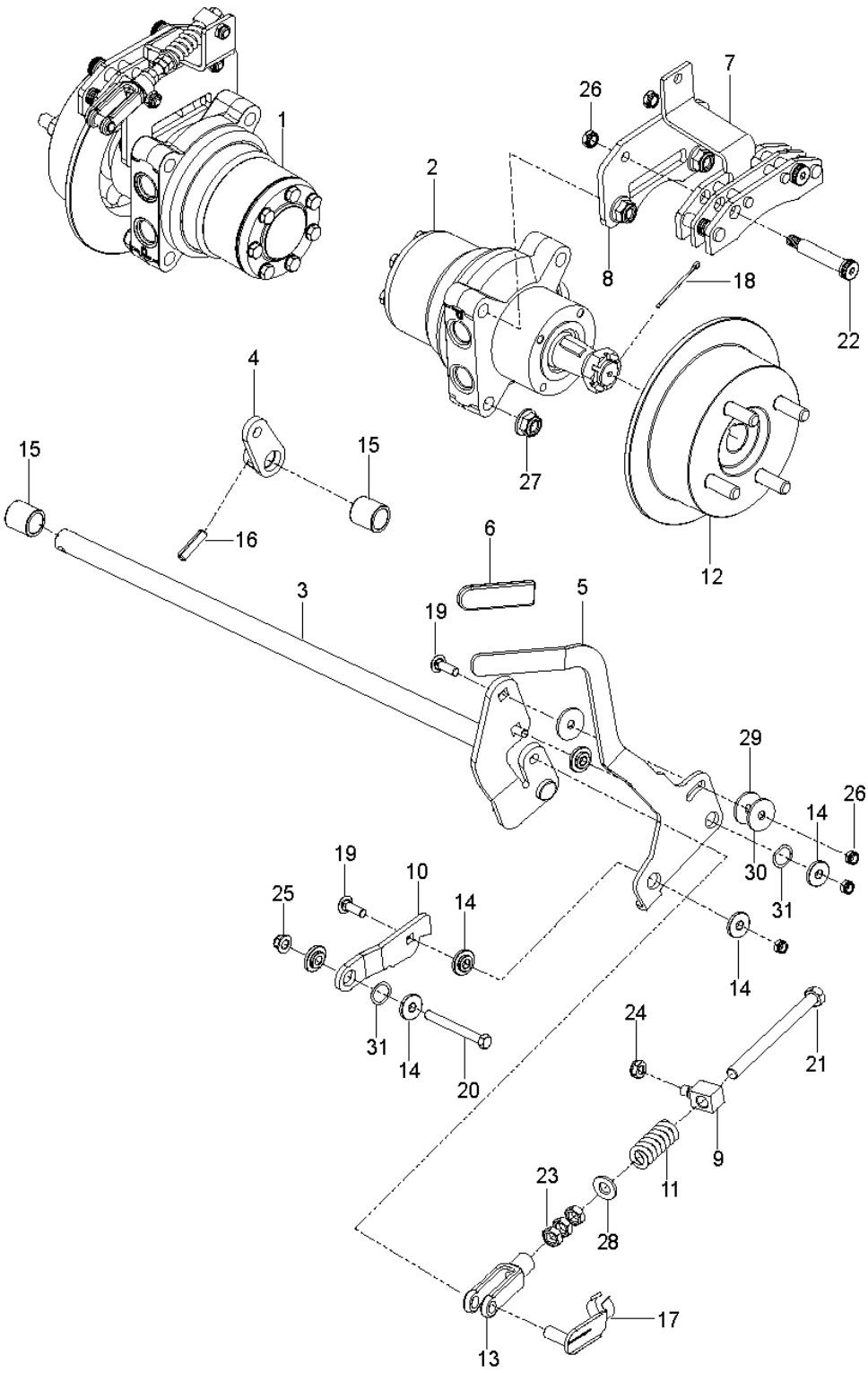

Ref.	Article N.	Description	Qty	Kit
1	510004602	PLATE -	1	-
2	510019801	PULLEY -	1	-
3	525750301	MUFFLER -	1	-

Ref.	Article N.	Description	Qty	Kit
4	525749501	CLUTCH -	1	-
5	522676702	STOP -	1	-
6	539119680	ADAPTER -	1	-
7	539118911	NIPPLE -	1	-
8	539105072	90DEG.ELBOW 3/8NPT -	1	-
9	522837001	PLUG -	1	-
10	587044814	HOSE -	1	-
11	525749901	KEY -	1	-
12	539109618	O-RING -	1	-
13	539912222	CLAMP -	2	-
14	505280001	TIE WRAP -	1	-
15	874780716	BOLT -	1	-
16	581332801	BOLT -	1	-
17	532150406	BOLT -	4	-
18	574233801	SCREW -	3	-
19	872140508	BOLT -	3	-
20	539103153	NUT -	1	-
21	539112899	NUT, 5/16-18, NYLOC -	8	-
22	539102582	NUT -	1	-
23	539990247	WASHER -	1	-
24	539102593	WASHER -	4	-
25	539125626	WASHER	1	-

Ref.	Article N.	Description	Qty	Kit
		-		
26	525554201	HARNESS *NOT SHOWN*	1	-
27	574825801	KIT *SPARK ARRESTOR*	1	-
28	586839701	GASKET -	2	-
1	574482802	FRAME *w/ SAFETY DECALS*	1	-
2	574215602	PLATE *ORG*	1	-
3	574215702	PLATE *ORG*	1	-
4	522675702	BUMPER *ORG*	1	-
5	587898002	GUARD *GRY*	1	-
6	574228602	PLATE *GRY*	1	-
7	577327702	FRAME -	1	-
8	529279603	MOUNT -	1	-
9	529279703	MOUNT -	1	-
10	529279903	MOUNT -	1	-
11	529280003	MOUNT -	1	-
12	510082101	MOUNT -	4	-
13	510083201	MOUNT -	4	-
14	510040301	BRACKET -	2	-
15	539102845	SPRING -	4	-
16	574388001	PIN -	2	-
17	539200715	PIN -	2	-
18	575811501	BUMPER -	2	-

Ref.	Article N.	Description	Qty	Kit
19	522801401	BUMPER -	4	-
20	539102502	STUD -	4	-
21	539109867	CLAMP -	1	-
22	539131780	BOLT -	2	-
23	525544001	BOLT -	2	-
24	874490512	BOLT -	14	-
25	874490632	SCREW -	4	-
26	525612801	SCREW -	4	-
27	574233801	SCREW -	2	-
28	580754601	BOLT -	6	-
29	539100145	BOLT -	2	-
30	817490508	SCREW -	6	-
31	817490516	SCREW -	7	-
32	539111028	NUTSERT 5/16-18 THICK GRIP -	2	-
33	521996501	NUT -	8	-
34	539108120	NUT -	2	-
35	539112899	NUT, 5/16-18, NYLOC -	22	-
36	525829101	NUT -	6	-
37	873800400	NUT -	4	-
38	539102653	WASHER -	6	-
39	539109600	WASHER -	6	-
40	819111116	WASHER	4	-

Ref.	Article N.	Description	Qty	Kit
		-		
41	539111897	WASHER -	4	-
42	576738801	KIT -	1	-
1	506007902	FRAME -	1	-
2	573978301	DRIVE BELT -	1	-
3	576035902	RESERVOIR -	1	-
4	522805401	FILTER -	1	-
5	506120501	PUMP *LT*	1	-
6	506120401	PUMP *RT*	1	-
7	510019002	PULLEY -	2	-
8	510283702	PULLEY -	1	-
9	525435601	PIVOT -	1	-
10	510206301	PIVOT -	1	-
11	510041603	ARM -	1	-
12	522805001	TUBE -	1	-
13	510254501	SHIELD -	1	-
14	539114662	SHIELD, DUST -	1	-
15	574398502	SHIELD -	2	-
16	577437201	SPRING -	1	-
17	576577701	ASSEMBLY -	2	-
18	539101242	ELBOW -	1	-
19	539103316	CONNECTION -	2	-

Ref.	Article N.	Description	Qty	Kit
20	539101239	CONNECTOR -	4	-
21	539101237	CONNECTION -	7	-
22	510013601	LINE -	1	-
23	510013701	LINE -	1	-
24	510013801	LINE -	1	-
25	510013901	LINE -	1	-
26	510014001	LINE -	1	-
27	510014501	LINE -	2	-
28	510010701	LINE -	1	-
29	575872301	HEAD -	1	-
30	522805301	CAP -	1	-
31	539105168	CAP -	1	-
32	539101177	KEY -	2	-
33	872140506	BOLT -	4	-
34	872140610	BOLT -	1	-
35	872140622	BOLT -	1	-
36	872140512	BOLT -	1	-
37	874780844	BOLT -	8	-
38	525544801	SCREW -	4	-
39	525834201	SCREW -	4	-
40	817490516	SCREW -	2	-
41	539990072	SCREW	2	-

Ref.	Article N.	Description	Qty	Kit
		-		
42	539103433	SCREW -	1	-
43	539102717	SCREW -	4	-
44	539990613	NUT -	1	-
45	539112899	NUT, 5/16-18, NYLOC -	5	-
46	521996501	NUT -	4	-
47	539200282	NUT -	4	-
48	521991101	NUT -	5	-
49	539115528	1/2` CONTACT BELLSPR -	1	-
50	522023401	WASHER -	1	-
51	539990052	WASHER -	2	-
52	819182212	WASHER -	1	-
1	584280401	FUEL TANK ASSY -	1	-
2	584280301	FUEL TANK ASSY -	1	-
3	529280202	PANEL -	1	-
4	574514001	TIMER -	1	-
5	586161801	HOUR METER -	1	-
6	574455401	SWITCH -	1	-
7	582107602	SWITCH -	1	-
8	574455501	KEY -	1	-
9	574206901	CABLE -	1	-
10	574207002	CABLE -	1	-

Ref.	Article N.	Description	Qty	Kit
11	539132624	KNOB -	1	-
12	575018101	CAP -	2	-
13	576978701	HUB CAP -	1	-
14	539103178	NUT CAP -	1	-
15	576618101	TANK VENT -	2	-
16	574235301	LOOM -	1	-
17	539102436	BATTERY -	1	-
18	577150501	SERVICE KIT -	1	-
19	522718701	CABLE -	1	-
20	522710701	CABLE -	1	-
21	525865401	TUBE ASSY -	2	-
22	587044533	HOSE -	1	-
23	587044530	HOSE -	1	-
24	587593401	HOSE ASSY -	1	-
25	532414114	FILTER -	2	-
26	576927001	MOUNT -	1	-
27	576926901	MOUNT -	1	-
28	510029902	BRACKET -	1	-
29	577104002	BRACKET -	1	-
30	588107201	BRACKET -	1	-
31	539102759	INSULATOR -	2	-
32	510064001	HOOK	2	-

Ref.	Article N.	Description	Qty	Kit
		-		
33	576618201	GROMMET -	2	-
34	539105245	GROMMET -	2	-
35	539105974	GROMMET -	1	-
36	539990580	SCREW -	1	-
37	872140506	BOLT -	2	-
38	539114341	SCREW -	3	-
39	574822701	SCREW -	4	-
40	539990997	NUT -	2	-
41	539976977	NUT -	4	-
42	539108120	NUT -	1	-
43	539112899	NUT, 5/16-18, NYLOC -	2	-
44	539990598	WASHER -	1	-
45	589670101	HARNESS *NOT SHOWN*	1	-
1	588127602	DECK -	1	-
2	575658403	DRIVE BELT -	1	-
3	539105711	BLADE -	3	-
4	510437502	BAFFLE -	1	-
5	539130646	PULLEY -	3	-
6	510015101	PULLEY -	1	-
7	525598201	PULLEY -	1	-
8	510019601	PULLEY -	1	-

Ref.	Article N.	Description	Qty	Kit
9	574722201	SERVICE KIT -	1	-
10	580943304	SPINDLE -	3	-
11	574169601	ROLLER -	5	-
12	510131202	SHIELD -	2	-
13	510254501	SHIELD -	2	-
14	510262201	SHIELD -	1	-
15	539976998	NIPPLE -	3	-
16	525310901	SPRING -	1	-
17	580942201	HUB -	3	-
18	539130638	BEARING -	6	-
19	510263701	BEARING -	3	-
20	522729701	BEARING -	1	-
21	539104763	CLIP -	8	-
22	574262102	GUIDE -	1	-
23	574262201	KEEPER -	1	-
24	580942501	CARRIER -	3	-
25	574197002	BRACKET -	1	-
26	525486002	BRACKET -	1	-
27	525485801	CHUTE -	1	-
28	580942701	V-RING -	3	-
29	580942301	SPACER -	3	-
30	525465601	SPACER	1	-

Ref.	Article N.	Description	Qty	Kit
		-		
31	574196401	TUBE -	2	-
32	574196501	TUBE -	1	-
33	580942601	SEAL -	6	-
34	539990209	SCREW -	8	-
35	539101686	SCREW -	1	-
36	539130315	BOLT -	9	-
37	574210601	SCREW -	18	-
38	525612801	SCREW -	2	-
39	539131781	BOLT -	2	-
40	874490512	BOLT -	3	-
41	539115620	1/4-20X3/4 CARR BLT -	4	-
42	539128101	BOLT -	1	-
43	574202001	BOLT -	1	-
44	539119007	SCREW -	3	-
45	539107271	SCREW -	1	-
46	510022401	BOLT -	1	-
47	510022301	SCREW -	3	-
48	539102933	SCREW -	3	-
49	539100472	SCREW -	2	-
50	521991101	NUT -	4	-
51	539130653	NUT -	3	-

Ref.	Article N.	Description	Qty	Kit
52	539976978	NUT -	4	-
53	521996501	NUT -	4	-
54	539112899	NUT, 5/16-18, NYLOC -	9	-
55	810030500	WASHER -	8	-
56	539109600	WASHER -	9	-
57	539990692	WASHER -	10	-
58	522023401	WASHER -	1	-
59	539106504	WASHER -	3	-
60	522829301	BLADE *OPTIONAL*	3	-
61	574481301	BLADE *OPTIONAL*	3	-
62	522936601	BLADE *OPTIONAL*	3	-
63	539109755	BLADE *OPTIONAL*	3	-
1	510408502	PLATE -	1	-
2	510408602	PLATE -	1	-
3	525822201	PLATE -	2	-
4	510089801	ROD -	2	-
5	510407601	ROD -	1	-
6	510406301	BAR -	1	-
7	510410703	SHAFT -	2	-
8	510409602	SHAFT -	1	-
9	510023601	SHAFT -	4	-
10	510023902	BLOCK	4	-

Ref.	Article N.	Description	Qty	Kit
		-		
11	510412301	PIVOT -	2	-
12	510407201	LATCH -	1	-
13	510406801	LATCH -	1	-
14	510089401	BUSHING -	4	-
15	510089201	BUSHING -	2	-
16	539916561	MACHINE BUSHING -	1	-
17	510029201	SPRING -	2	-
18	510376601	SPRING -	1	-
19	510376701	SPRING -	1	-
20	510106501	STRUT -	2	-
21	510406601	LINK -	1	-
22	510083801	BALL JOINT -	1	-
23	510407501	SWIVEL -	1	-
24	510406401	SWIVEL -	1	-
25	510362501	SPACER -	4	-
26	510408401	SPACER -	1	-
27	525465501	HEIGHT ADJUSTER -	1	-
27	510022502	ARM -	1	-
28	510410002	ARM -	4	-
29	525465501	HEIGHT ADJUSTER -	3	-
29	510022501	ARM -	1	-

Ref.	Article N.	Description	Qty	Kit
30	539102641	CHAIN -	4	-
31	510089501	PAD -	1	-
32	510406701	GUIDE -	1	-
33	510408301	PEDAL -	1	-
34	510407801	PEDAL -	1	-
35	510406501	CAP -	1	-
36	510090101	PIN -	8	-
37	510016501	PIN -	1	-
38	515988201	PIN -	2	-
39	539120993	EYE BOLT -	2	-
40	525822501	KEY -	4	-
41	539105069	RETAINER RING -	4	-
42	539990870	RING -	1	-
43	522705201	RING -	4	-
44	539101949	RETAINER RING -	2	-
45	539102454	RETAINER RING -	3	-
46	539912730	RING -	1	-
47	539990208	SCREW -	2	-
48	539122728	BOLT -	1	-
49	525828901	BOLT -	2	-
50	525465701	BOLT -	4	-
51	525822101	BOLT	4	-

Ref.	Article N.	Description	Qty	Kit
		-		
52	525612801	SCREW -	2	-
53	525829001	BOLT -	2	-
54	525465401	SCREW -	1	-
55	510408201	BOLT -	1	-
56	516035501	BOLT -	1	-
57	522705601	SCREW -	1	-
58	521996501	NUT -	4	-
59	539991112	NUT -	1	-
60	521991101	NUT -	3	-
61	525829101	NUT -	2	-
62	539990625	NUT -	4	-
63	539108677	NUT 3/4-10 HEX ZD -	2	-
64	539112899	NUT, 5/16-18, NYLOC -	8	-
65	539108732	NUT 3/8-24 HEX JAM ZD -	1	-
66	539990122	WASHER -	1	-
1	574805202	MOTOR *RT*	1	-
2	574805201	MOTOR *LT*	1	-
3	525851201	SHAFT	1	-
4	510025901	ARM	1	-
5	515980002	LEVER	1	-
6	539976526	HANDLE	1	-
7	539133047	CALIPER	2	-
8	525851601	PLATE	2	-
9	525851401	SWIVEL	1	-

Ref.	Article N.	Description	Qty	Kit
10	515980301	LINK	1	-
11	539113952	SPRING	1	-
12	525848701	HUB	2	-
13	539977465	BRACKET	1	-
14	539132161	BLADE BUSHING	6	-
15	510089201	BUSHING	2	-
16	539110631	5/16 DIA ROLL PIN	1	-
17	522705901	PIN	1	-
18	539102889	SPLIT PIN	2	-
19	872140610	BOLT	3	-
20	539923463	HCS 3/8-16 X 3-1/4 GR5 ZD	1	-
21	539104984	SCREW	1	-
22	516035501	BOLT	4	-
23	539108732	NUT 3/8-24 HEX JAM ZD	3	-
24	539115617	NUT	1	-
25	521996501	NUT	1	-
26	539200282	NUT	9	-
27	521991101	NUT	8	-
28	819131316	WASHER	1	-
29	525490901	WASHER	2	-
30	539912063	WASHER	1	-
31	539133007	WASHER	2	-
1	501552801	SEAT -	1	-
2	510039302	PAN -	1	-
3	539119741	SWITCH -	1	-
4	539130359	BELT -	1	-
5	510064101	ROD -	1	-
6	585857402	BRACKET -	1	-
7	520283101	SPRING -	1	-
8	510283801	BUMPER -	2	-
9	539913847	BOLT -	2	-

Ref.	Article N.	Description	Qty	Kit
10	539113226	BOLT -	4	-
11	515990601	BOLT -	2	-
12	525834201	SCREW -	2	-
13	521996501	NUT -	4	-
14	539112899	NUT, 5/16-18, NYLOC -	6	-
1	516020301	DAMPER -	2	-
2	525447901	STRUT -	1	-
3	539113792	SWITCH -	1	-
4	532109553	SWITCH -	2	-
5	539131518	BEARING -	4	-
6	586737202	BRACKET -	2	-
7	501741101	BRACKET -	2	-
8	574269401	LEVER -	2	-
9	577042403	SERVICE KIT -	1	-
10	577042303	SERVICE KIT -	1	-
11	576140302	LEVER -	2	-
12	539109149	CONNECTOR -	4	-
12	539112899	NUT, 5/16-18, NYLOC -	6	-
13	539102590	BALL JOINT -	4	-
14	539102845	SPRING -	1	-
15	539020035	SPRING -	1	-
16	576850301	SPRING	1	-

Ref.	Article N.	Description	Qty	Kit
		-		
17	577252401	SPACER -	2	-
18	511594901	BUSHING -	1	-
19	511595001	LINK -	1	-
20	539110607	STUD -	2	-
21	539130894	GRIP -	2	-
22	575811501	BUMPER -	2	-
23	539131799	KNOB -	1	-
24	522559201	LINKAGE -	2	-
25	522842801	LINKAGE -	2	-
26	581437501	BLOCK -	2	-
27	581223001	PLATE -	2	-
28	539976988	PIN -	4	-
29	539104763	CLIP -	4	-
30	872110406	BOLT -	1	-
31	539990316	BOLT -	2	-
32	525544001	BOLT -	4	-
33	874780844	BOLT -	2	-
34	525612801	SCREW -	4	-
35	874780520	BOLT -	1	-
36	874490512	BOLT -	4	-
37	576850402	SCREW -	2	-

Ref.	Article N.	Description	Qty	Kit
38	574822701	SCREW -	6	-
39	539112899	NUT, 5/16-18, NYLOC -	1	-
40	539990223	NUT -	4	-
41	539108120	NUT -	4	-
42	539108010	NUT -	2	-
43	539913847	BOLT -	2	-
44	539990717	NUT -	2	-
46	539108732	NUT 3/8-24 HEX JAM ZD -	4	-
47	539990187	WASHER -	2	-
48	819131316	WASHER -	4	-
49	539990692	WASHER -	4	-
50	539127046	NUT -	1	-
50	819111116	WASHER -	4	-
1	510154601	TIRE -	2	-
2	510154501	TIRE -	2	-
3	539105152	TIRE -	2	-
4	510154502	WHEEL RIM -	2	-
5	525611902	FORK -	2	-
6	539105518	SPACER -	4	-
7	510034301	SEAL -	2	-
8	510034403	BEARING -	4	-
9	539101474	NIPPLE	2	-

Ref.	Article N.	Description	Qty	Kit
		-		
10	510034001	CAP -	2	-
11	539105517	BOLT -	2	-
12	521991101	NUT -	2	-
13	522842601	NUT -	2	-
14	539101173	NUT -	8	-
15	539990250	WASHER -	2	-
16	574824701	WASHER -	2	-
18	539105521	WHEEL ASSY *PNEUMATIC*	2	-
1	510246602	DECAL *CONSOLE*	1	-
2	516038101	DECAL *HEIGHT*	1	-
3	525349701	DECAL *HEIGHT*	1	-
4	532424102	DECAL *SPARK ARRESTOR*	1	-
5	532428676	DECAL *CROWN H SM*	1	-
6	532429196	DECAL *HUSQVARNA*	2	-
7	589283001	DECAL *MOTION CONTROL*	2	-
8	539105744	DECAL *BELT DRIVE WARN*	1	-
9	539105745	DECAL *BATTERY WARNING*	1	-
10	539105746	DECAL *SEVERING*	1	-
11	539107959	DECAL *WARNING*	1	-
12	585142601	DECAL *TRACKING*	2	-
13	585148801	DECAL *PARK BRAKE*	1	-

Ref.	Article N.	Description	Qty	Kit
14	574437301	DECAL *BELT ROUTE*	1	-
15	574455001	DECAL *CROWN LG*	1	-
16	574569401	DECAL *FUSE*	1	-
17	574569002	DECAL *ROPS WARNING*	1	-
18	574569006	DECAL *ROPS*	1	-
19	574825901	DECAL *SERVICE*	1	-
20	577150101	DECAL *FUEL VALVE*	1	-
21	581384401	DECAL *PZ 60*	1	-
22	581724301	DECAL *NO STEP*	2	-
23	581724401	DECAL *DEFLECTOR*	1	-
24	584904601	DECAL *BLADE WARNING*	1	-
25	539101881	DECAL *EXHAUST WARNING*	1	-

SEAT

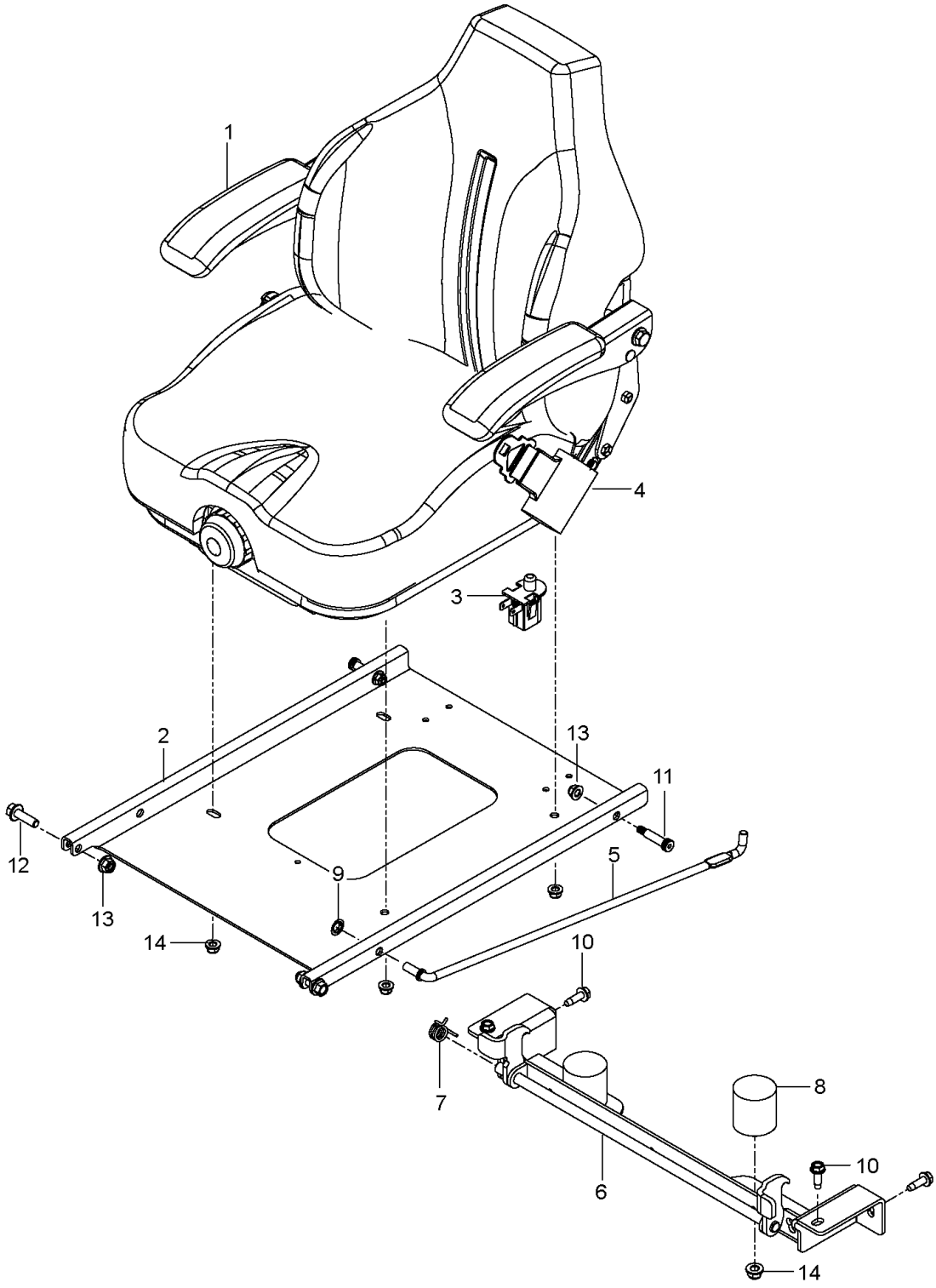

Ref.	Article N.	Description	Qty	Kit
1	510004602	PLATE -	1	-
2	510019801	PULLEY -	1	-
3	525750301	MUFFLER -	1	-

Ref.	Article N.	Description	Qty	Kit
4	525749501	CLUTCH -	1	-
5	522676702	STOP -	1	-
6	539119680	ADAPTER -	1	-
7	539118911	NIPPLE -	1	-
8	539105072	90DEG.ELBOW 3/8NPT -	1	-
9	522837001	PLUG -	1	-
10	587044814	HOSE -	1	-
11	525749901	KEY -	1	-
12	539109618	O-RING -	1	-
13	539912222	CLAMP -	2	-
14	505280001	TIE WRAP -	1	-
15	874780716	BOLT -	1	-
16	581332801	BOLT -	1	-
17	532150406	BOLT -	4	-
18	574233801	SCREW -	3	-
19	872140508	BOLT -	3	-
20	539103153	NUT -	1	-
21	539112899	NUT, 5/16-18, NYLOC -	8	-
22	539102582	NUT -	1	-
23	539990247	WASHER -	1	-
24	539102593	WASHER -	4	-
25	539125626	WASHER	1	-

Ref.	Article N.	Description	Qty	Kit
		-		
26	525554201	HARNESS *NOT SHOWN*	1	-
27	574825801	KIT *SPARK ARRESTOR*	1	-
28	586839701	GASKET -	2	-
1	574482802	FRAME *w/ SAFETY DECALS*	1	-
2	574215602	PLATE *ORG*	1	-
3	574215702	PLATE *ORG*	1	-
4	522675702	BUMPER *ORG*	1	-
5	587898002	GUARD *GRY*	1	-
6	574228602	PLATE *GRY*	1	-
7	577327702	FRAME -	1	-
8	529279603	MOUNT -	1	-
9	529279703	MOUNT -	1	-
10	529279903	MOUNT -	1	-
11	529280003	MOUNT -	1	-
12	510082101	MOUNT -	4	-
13	510083201	MOUNT -	4	-
14	510040301	BRACKET -	2	-
15	539102845	SPRING -	4	-
16	574388001	PIN -	2	-
17	539200715	PIN -	2	-
18	575811501	BUMPER -	2	-

Ref.	Article N.	Description	Qty	Kit
19	522801401	BUMPER -	4	-
20	539102502	STUD -	4	-
21	539109867	CLAMP -	1	-
22	539131780	BOLT -	2	-
23	525544001	BOLT -	2	-
24	874490512	BOLT -	14	-
25	874490632	SCREW -	4	-
26	525612801	SCREW -	4	-
27	574233801	SCREW -	2	-
28	580754601	BOLT -	6	-
29	539100145	BOLT -	2	-
30	817490508	SCREW -	6	-
31	817490516	SCREW -	7	-
32	539111028	NUTSERT 5/16-18 THICK GRIP -	2	-
33	521996501	NUT -	8	-
34	539108120	NUT -	2	-
35	539112899	NUT, 5/16-18, NYLOC -	22	-
36	525829101	NUT -	6	-
37	873800400	NUT -	4	-
38	539102653	WASHER -	6	-
39	539109600	WASHER -	6	-
40	819111116	WASHER	4	-

Ref.	Article N.	Description	Qty	Kit
		-		
41	539111897	WASHER -	4	-
42	576738801	KIT -	1	-
1	506007902	FRAME -	1	-
2	573978301	DRIVE BELT -	1	-
3	576035902	RESERVOIR -	1	-
4	522805401	FILTER -	1	-
5	506120501	PUMP *LT*	1	-
6	506120401	PUMP *RT*	1	-
7	510019002	PULLEY -	2	-
8	510283702	PULLEY -	1	-
9	525435601	PIVOT -	1	-
10	510206301	PIVOT -	1	-
11	510041603	ARM -	1	-
12	522805001	TUBE -	1	-
13	510254501	SHIELD -	1	-
14	539114662	SHIELD, DUST -	1	-
15	574398502	SHIELD -	2	-
16	577437201	SPRING -	1	-
17	576577701	ASSEMBLY -	2	-
18	539101242	ELBOW -	1	-
19	539103316	CONNECTION -	2	-

Ref.	Article N.	Description	Qty	Kit
20	539101239	CONNECTOR -	4	-
21	539101237	CONNECTION -	7	-
22	510013601	LINE -	1	-
23	510013701	LINE -	1	-
24	510013801	LINE -	1	-
25	510013901	LINE -	1	-
26	510014001	LINE -	1	-
27	510014501	LINE -	2	-
28	510010701	LINE -	1	-
29	575872301	HEAD -	1	-
30	522805301	CAP -	1	-
31	539105168	CAP -	1	-
32	539101177	KEY -	2	-
33	872140506	BOLT -	4	-
34	872140610	BOLT -	1	-
35	872140622	BOLT -	1	-
36	872140512	BOLT -	1	-
37	874780844	BOLT -	8	-
38	525544801	SCREW -	4	-
39	525834201	SCREW -	4	-
40	817490516	SCREW -	2	-
41	539990072	SCREW	2	-

Ref.	Article N.	Description	Qty	Kit
		-		
42	539103433	SCREW -	1	-
43	539102717	SCREW -	4	-
44	539990613	NUT -	1	-
45	539112899	NUT, 5/16-18, NYLOC -	5	-
46	521996501	NUT -	4	-
47	539200282	NUT -	4	-
48	521991101	NUT -	5	-
49	539115528	1/2` CONTACT BELLSPR -	1	-
50	522023401	WASHER -	1	-
51	539990052	WASHER -	2	-
52	819182212	WASHER -	1	-
1	584280401	FUEL TANK ASSY -	1	-
2	584280301	FUEL TANK ASSY -	1	-
3	529280202	PANEL -	1	-
4	574514001	TIMER -	1	-
5	586161801	HOUR METER -	1	-
6	574455401	SWITCH -	1	-
7	582107602	SWITCH -	1	-
8	574455501	KEY -	1	-
9	574206901	CABLE -	1	-
10	574207002	CABLE -	1	-

Ref.	Article N.	Description	Qty	Kit
11	539132624	KNOB -	1	-
12	575018101	CAP -	2	-
13	576978701	HUB CAP -	1	-
14	539103178	NUT CAP -	1	-
15	576618101	TANK VENT -	2	-
16	574235301	LOOM -	1	-
17	539102436	BATTERY -	1	-
18	577150501	SERVICE KIT -	1	-
19	522718701	CABLE -	1	-
20	522710701	CABLE -	1	-
21	525865401	TUBE ASSY -	2	-
22	587044533	HOSE -	1	-
23	587044530	HOSE -	1	-
24	587593401	HOSE ASSY -	1	-
25	532414114	FILTER -	2	-
26	576927001	MOUNT -	1	-
27	576926901	MOUNT -	1	-
28	510029902	BRACKET -	1	-
29	577104002	BRACKET -	1	-
30	588107201	BRACKET -	1	-
31	539102759	INSULATOR -	2	-
32	510064001	HOOK	2	-

Ref.	Article N.	Description	Qty	Kit
		-		
33	576618201	GROMMET -	2	-
34	539105245	GROMMET -	2	-
35	539105974	GROMMET -	1	-
36	539990580	SCREW -	1	-
37	872140506	BOLT -	2	-
38	539114341	SCREW -	3	-
39	574822701	SCREW -	4	-
40	539990997	NUT -	2	-
41	539976977	NUT -	4	-
42	539108120	NUT -	1	-
43	539112899	NUT, 5/16-18, NYLOC -	2	-
44	539990598	WASHER -	1	-
45	589670101	HARNESS *NOT SHOWN*	1	-
1	588127602	DECK -	1	-
2	575658403	DRIVE BELT -	1	-
3	539105711	BLADE -	3	-
4	510437502	BAFFLE -	1	-
5	539130646	PULLEY -	3	-
6	510015101	PULLEY -	1	-
7	525598201	PULLEY -	1	-
8	510019601	PULLEY -	1	-

Ref.	Article N.	Description	Qty	Kit
9	574722201	SERVICE KIT -	1	-
10	580943304	SPINDLE -	3	-
11	574169601	ROLLER -	5	-
12	510131202	SHIELD -	2	-
13	510254501	SHIELD -	2	-
14	510262201	SHIELD -	1	-
15	539976998	NIPPLE -	3	-
16	525310901	SPRING -	1	-
17	580942201	HUB -	3	-
18	539130638	BEARING -	6	-
19	510263701	BEARING -	3	-
20	522729701	BEARING -	1	-
21	539104763	CLIP -	8	-
22	574262102	GUIDE -	1	-
23	574262201	KEEPER -	1	-
24	580942501	CARRIER -	3	-
25	574197002	BRACKET -	1	-
26	525486002	BRACKET -	1	-
27	525485801	CHUTE -	1	-
28	580942701	V-RING -	3	-
29	580942301	SPACER -	3	-
30	525465601	SPACER	1	-

Ref.	Article N.	Description	Qty	Kit
		-		
31	574196401	TUBE -	2	-
32	574196501	TUBE -	1	-
33	580942601	SEAL -	6	-
34	539990209	SCREW -	8	-
35	539101686	SCREW -	1	-
36	539130315	BOLT -	9	-
37	574210601	SCREW -	18	-
38	525612801	SCREW -	2	-
39	539131781	BOLT -	2	-
40	874490512	BOLT -	3	-
41	539115620	1/4-20X3/4 CARR BLT -	4	-
42	539128101	BOLT -	1	-
43	574202001	BOLT -	1	-
44	539119007	SCREW -	3	-
45	539107271	SCREW -	1	-
46	510022401	BOLT -	1	-
47	510022301	SCREW -	3	-
48	539102933	SCREW -	3	-
49	539100472	SCREW -	2	-
50	521991101	NUT -	4	-
51	539130653	NUT -	3	-

Ref.	Article N.	Description	Qty	Kit
52	539976978	NUT -	4	-
53	521996501	NUT -	4	-
54	539112899	NUT, 5/16-18, NYLOC -	9	-
55	810030500	WASHER -	8	-
56	539109600	WASHER -	9	-
57	539990692	WASHER -	10	-
58	522023401	WASHER -	1	-
59	539106504	WASHER -	3	-
60	522829301	BLADE *OPTIONAL*	3	-
61	574481301	BLADE *OPTIONAL*	3	-
62	522936601	BLADE *OPTIONAL*	3	-
63	539109755	BLADE *OPTIONAL*	3	-
1	510408502	PLATE -	1	-
2	510408602	PLATE -	1	-
3	525822201	PLATE -	2	-
4	510089801	ROD -	2	-
5	510407601	ROD -	1	-
6	510406301	BAR -	1	-
7	510410703	SHAFT -	2	-
8	510409602	SHAFT -	1	-
9	510023601	SHAFT -	4	-
10	510023902	BLOCK	4	-

Ref.	Article N.	Description	Qty	Kit
		-		
11	510412301	PIVOT -	2	-
12	510407201	LATCH -	1	-
13	510406801	LATCH -	1	-
14	510089401	BUSHING -	4	-
15	510089201	BUSHING -	2	-
16	539916561	MACHINE BUSHING -	1	-
17	510029201	SPRING -	2	-
18	510376601	SPRING -	1	-
19	510376701	SPRING -	1	-
20	510106501	STRUT -	2	-
21	510406601	LINK -	1	-
22	510083801	BALL JOINT -	1	-
23	510407501	SWIVEL -	1	-
24	510406401	SWIVEL -	1	-
25	510362501	SPACER -	4	-
26	510408401	SPACER -	1	-
27	525465501	HEIGHT ADJUSTER -	1	-
27	510022502	ARM -	1	-
28	510410002	ARM -	4	-
29	525465501	HEIGHT ADJUSTER -	3	-
29	510022501	ARM -	1	-

Ref.	Article N.	Description	Qty	Kit
30	539102641	CHAIN -	4	-
31	510089501	PAD -	1	-
32	510406701	GUIDE -	1	-
33	510408301	PEDAL -	1	-
34	510407801	PEDAL -	1	-
35	510406501	CAP -	1	-
36	510090101	PIN -	8	-
37	510016501	PIN -	1	-
38	515988201	PIN -	2	-
39	539120993	EYE BOLT -	2	-
40	525822501	KEY -	4	-
41	539105069	RETAINER RING -	4	-
42	539990870	RING -	1	-
43	522705201	RING -	4	-
44	539101949	RETAINER RING -	2	-
45	539102454	RETAINER RING -	3	-
46	539912730	RING -	1	-
47	539990208	SCREW -	2	-
48	539122728	BOLT -	1	-
49	525828901	BOLT -	2	-
50	525465701	BOLT -	4	-
51	525822101	BOLT	4	-

Ref.	Article N.	Description	Qty	Kit
		-		
52	525612801	SCREW -	2	-
53	525829001	BOLT -	2	-
54	525465401	SCREW -	1	-
55	510408201	BOLT -	1	-
56	516035501	BOLT -	1	-
57	522705601	SCREW -	1	-
58	521996501	NUT -	4	-
59	539991112	NUT -	1	-
60	521991101	NUT -	3	-
61	525829101	NUT -	2	-
62	539990625	NUT -	4	-
63	539108677	NUT 3/4-10 HEX ZD -	2	-
64	539112899	NUT, 5/16-18, NYLOC -	8	-
65	539108732	NUT 3/8-24 HEX JAM ZD -	1	-
66	539990122	WASHER -	1	-
1	574805202	MOTOR *RT*	1	-
2	574805201	MOTOR *LT*	1	-
3	525851201	SHAFT	1	-
4	510025901	ARM	1	-
5	515980002	LEVER	1	-
6	539976526	HANDLE	1	-
7	539133047	CALIPER	2	-
8	525851601	PLATE	2	-
9	525851401	SWIVEL	1	-

Ref.	Article N.	Description	Qty	Kit
10	515980301	LINK	1	-
11	539113952	SPRING	1	-
12	525848701	HUB	2	-
13	539977465	BRACKET	1	-
14	539132161	BLADE BUSHING	6	-
15	510089201	BUSHING	2	-
16	539110631	5/16 DIA ROLL PIN	1	-
17	522705901	PIN	1	-
18	539102889	SPLIT PIN	2	-
19	872140610	BOLT	3	-
20	539923463	HCS 3/8-16 X 3-1/4 GR5 ZD	1	-
21	539104984	SCREW	1	-
22	516035501	BOLT	4	-
23	539108732	NUT 3/8-24 HEX JAM ZD	3	-
24	539115617	NUT	1	-
25	521996501	NUT	1	-
26	539200282	NUT	9	-
27	521991101	NUT	8	-
28	819131316	WASHER	1	-
29	525490901	WASHER	2	-
30	539912063	WASHER	1	-
31	539133007	WASHER	2	-
1	501552801	SEAT -	1	-
2	510039302	PAN -	1	-
3	539119741	SWITCH -	1	-
4	539130359	BELT -	1	-
5	510064101	ROD -	1	-
6	585857402	BRACKET -	1	-
7	520283101	SPRING -	1	-
8	510283801	BUMPER -	2	-
9	539913847	BOLT -	2	-

Ref.	Article N.	Description	Qty	Kit
10	539113226	BOLT -	4	-
11	515990601	BOLT -	2	-
12	525834201	SCREW -	2	-
13	521996501	NUT -	4	-
14	539112899	NUT, 5/16-18, NYLOC -	6	-
1	516020301	DAMPER -	2	-
2	525447901	STRUT -	1	-
3	539113792	SWITCH -	1	-
4	532109553	SWITCH -	2	-
5	539131518	BEARING -	4	-
6	586737202	BRACKET -	2	-
7	501741101	BRACKET -	2	-
8	574269401	LEVER -	2	-
9	577042403	SERVICE KIT -	1	-
10	577042303	SERVICE KIT -	1	-
11	576140302	LEVER -	2	-
12	539109149	CONNECTOR -	4	-
12	539112899	NUT, 5/16-18, NYLOC -	6	-
13	539102590	BALL JOINT -	4	-
14	539102845	SPRING -	1	-
15	539020035	SPRING -	1	-
16	576850301	SPRING	1	-

Ref.	Article N.	Description	Qty	Kit
		-		
17	577252401	SPACER -	2	-
18	511594901	BUSHING -	1	-
19	511595001	LINK -	1	-
20	539110607	STUD -	2	-
21	539130894	GRIP -	2	-
22	575811501	BUMPER -	2	-
23	539131799	KNOB -	1	-
24	522559201	LINKAGE -	2	-
25	522842801	LINKAGE -	2	-
26	581437501	BLOCK -	2	-
27	581223001	PLATE -	2	-
28	539976988	PIN -	4	-
29	539104763	CLIP -	4	-
30	872110406	BOLT -	1	-
31	539990316	BOLT -	2	-
32	525544001	BOLT -	4	-
33	874780844	BOLT -	2	-
34	525612801	SCREW -	4	-
35	874780520	BOLT -	1	-
36	874490512	BOLT -	4	-
37	576850402	SCREW -	2	-

Ref.	Article N.	Description	Qty	Kit
38	574822701	SCREW -	6	-
39	539112899	NUT, 5/16-18, NYLOC -	1	-
40	539990223	NUT -	4	-
41	539108120	NUT -	4	-
42	539108010	NUT -	2	-
43	539913847	BOLT -	2	-
44	539990717	NUT -	2	-
46	539108732	NUT 3/8-24 HEX JAM ZD -	4	-
47	539990187	WASHER -	2	-
48	819131316	WASHER -	4	-
49	539990692	WASHER -	4	-
50	539127046	NUT -	1	-
50	819111116	WASHER -	4	-
1	510154601	TIRE -	2	-
2	510154501	TIRE -	2	-
3	539105152	TIRE -	2	-
4	510154502	WHEEL RIM -	2	-
5	525611902	FORK -	2	-
6	539105518	SPACER -	4	-
7	510034301	SEAL -	2	-
8	510034403	BEARING -	4	-
9	539101474	NIPPLE	2	-

Ref.	Article N.	Description	Qty	Kit
		-		
10	510034001	CAP -	2	-
11	539105517	BOLT -	2	-
12	521991101	NUT -	2	-
13	522842601	NUT -	2	-
14	539101173	NUT -	8	-
15	539990250	WASHER -	2	-
16	574824701	WASHER -	2	-
18	539105521	WHEEL ASSY *PNEUMATIC*	2	-
1	510246602	DECAL *CONSOLE*	1	-
2	516038101	DECAL *HEIGHT*	1	-
3	525349701	DECAL *HEIGHT*	1	-
4	532424102	DECAL *SPARK ARRESTOR*	1	-
5	532428676	DECAL *CROWN H SM*	1	-
6	532429196	DECAL *HUSQVARNA*	2	-
7	589283001	DECAL *MOTION CONTROL*	2	-
8	539105744	DECAL *BELT DRIVE WARN*	1	-
9	539105745	DECAL *BATTERY WARNING*	1	-
10	539105746	DECAL *SEVERING*	1	-
11	539107959	DECAL *WARNING*	1	-
12	585142601	DECAL *TRACKING*	2	-
13	585148801	DECAL *PARK BRAKE*	1	-

Ref.	Article N.	Description	Qty	Kit
14	574437301	DECAL *BELT ROUTE*	1	-
15	574455001	DECAL *CROWN LG*	1	-
16	574569401	DECAL *FUSE*	1	-
17	574569002	DECAL *ROPS WARNING*	1	-
18	574569006	DECAL *ROPS*	1	-
19	574825901	DECAL *SERVICE*	1	-
20	577150101	DECAL *FUEL VALVE*	1	-
21	581384401	DECAL *PZ 60*	1	-
22	581724301	DECAL *NO STEP*	2	-
23	581724401	DECAL *DEFLECTOR*	1	-
24	584904601	DECAL *BLADE WARNING*	1	-
25	539101881	DECAL *EXHAUST WARNING*	1	-

STEERING

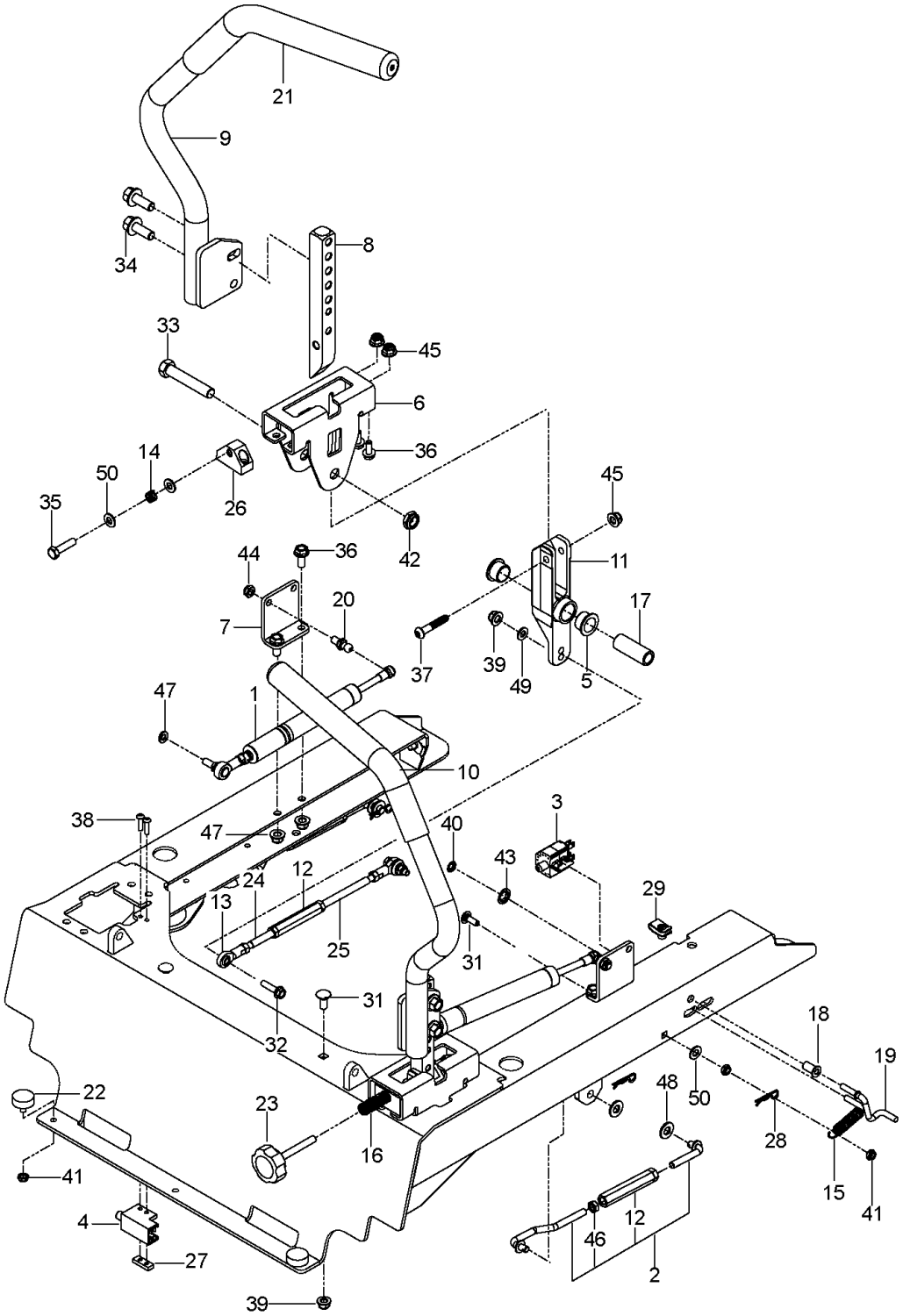

Ref.	Article N.	Description	Qty	Kit
1	510004602	PLATE -	1	-
2	510019801	PULLEY -	1	-
3	525750301	MUFFLER -	1	-

Ref.	Article N.	Description	Qty	Kit
4	525749501	CLUTCH -	1	-
5	522676702	STOP -	1	-
6	539119680	ADAPTER -	1	-
7	539118911	NIPPLE -	1	-
8	539105072	90DEG.ELBOW 3/8NPT -	1	-
9	522837001	PLUG -	1	-
10	587044814	HOSE -	1	-
11	525749901	KEY -	1	-
12	539109618	O-RING -	1	-
13	539912222	CLAMP -	2	-
14	505280001	TIE WRAP -	1	-
15	874780716	BOLT -	1	-
16	581332801	BOLT -	1	-
17	532150406	BOLT -	4	-
18	574233801	SCREW -	3	-
19	872140508	BOLT -	3	-
20	539103153	NUT -	1	-
21	539112899	NUT, 5/16-18, NYLOC -	8	-
22	539102582	NUT -	1	-
23	539990247	WASHER -	1	-
24	539102593	WASHER -	4	-
25	539125626	WASHER	1	-

Ref.	Article N.	Description	Qty	Kit
		-		
26	525554201	HARNESS *NOT SHOWN*	1	-
27	574825801	KIT *SPARK ARRESTOR*	1	-
28	586839701	GASKET -	2	-
1	574482802	FRAME *w/ SAFETY DECALS*	1	-
2	574215602	PLATE *ORG*	1	-
3	574215702	PLATE *ORG*	1	-
4	522675702	BUMPER *ORG*	1	-
5	587898002	GUARD *GRY*	1	-
6	574228602	PLATE *GRY*	1	-
7	577327702	FRAME -	1	-
8	529279603	MOUNT -	1	-
9	529279703	MOUNT -	1	-
10	529279903	MOUNT -	1	-
11	529280003	MOUNT -	1	-
12	510082101	MOUNT -	4	-
13	510083201	MOUNT -	4	-
14	510040301	BRACKET -	2	-
15	539102845	SPRING -	4	-
16	574388001	PIN -	2	-
17	539200715	PIN -	2	-
18	575811501	BUMPER -	2	-

Ref.	Article N.	Description	Qty	Kit
19	522801401	BUMPER -	4	-
20	539102502	STUD -	4	-
21	539109867	CLAMP -	1	-
22	539131780	BOLT -	2	-
23	525544001	BOLT -	2	-
24	874490512	BOLT -	14	-
25	874490632	SCREW -	4	-
26	525612801	SCREW -	4	-
27	574233801	SCREW -	2	-
28	580754601	BOLT -	6	-
29	539100145	BOLT -	2	-
30	817490508	SCREW -	6	-
31	817490516	SCREW -	7	-
32	539111028	NUTSERT 5/16-18 THICK GRIP -	2	-
33	521996501	NUT -	8	-
34	539108120	NUT -	2	-
35	539112899	NUT, 5/16-18, NYLOC -	22	-
36	525829101	NUT -	6	-
37	873800400	NUT -	4	-
38	539102653	WASHER -	6	-
39	539109600	WASHER -	6	-
40	819111116	WASHER	4	-

Ref.	Article N.	Description	Qty	Kit
		-		
41	539111897	WASHER -	4	-
42	576738801	KIT -	1	-
1	506007902	FRAME -	1	-
2	573978301	DRIVE BELT -	1	-
3	576035902	RESERVOIR -	1	-
4	522805401	FILTER -	1	-
5	506120501	PUMP *LT*	1	-
6	506120401	PUMP *RT*	1	-
7	510019002	PULLEY -	2	-
8	510283702	PULLEY -	1	-
9	525435601	PIVOT -	1	-
10	510206301	PIVOT -	1	-
11	510041603	ARM -	1	-
12	522805001	TUBE -	1	-
13	510254501	SHIELD -	1	-
14	539114662	SHIELD, DUST -	1	-
15	574398502	SHIELD -	2	-
16	577437201	SPRING -	1	-
17	576577701	ASSEMBLY -	2	-
18	539101242	ELBOW -	1	-
19	539103316	CONNECTION -	2	-

Ref.	Article N.	Description	Qty	Kit
20	539101239	CONNECTOR -	4	-
21	539101237	CONNECTION -	7	-
22	510013601	LINE -	1	-
23	510013701	LINE -	1	-
24	510013801	LINE -	1	-
25	510013901	LINE -	1	-
26	510014001	LINE -	1	-
27	510014501	LINE -	2	-
28	510010701	LINE -	1	-
29	575872301	HEAD -	1	-
30	522805301	CAP -	1	-
31	539105168	CAP -	1	-
32	539101177	KEY -	2	-
33	872140506	BOLT -	4	-
34	872140610	BOLT -	1	-
35	872140622	BOLT -	1	-
36	872140512	BOLT -	1	-
37	874780844	BOLT -	8	-
38	525544801	SCREW -	4	-
39	525834201	SCREW -	4	-
40	817490516	SCREW -	2	-
41	539990072	SCREW	2	-

Ref.	Article N.	Description	Qty	Kit
		-		
42	539103433	SCREW -	1	-
43	539102717	SCREW -	4	-
44	539990613	NUT -	1	-
45	539112899	NUT, 5/16-18, NYLOC -	5	-
46	521996501	NUT -	4	-
47	539200282	NUT -	4	-
48	521991101	NUT -	5	-
49	539115528	1/2` CONTACT BELLSPR -	1	-
50	522023401	WASHER -	1	-
51	539990052	WASHER -	2	-
52	819182212	WASHER -	1	-
1	584280401	FUEL TANK ASSY -	1	-
2	584280301	FUEL TANK ASSY -	1	-
3	529280202	PANEL -	1	-
4	574514001	TIMER -	1	-
5	586161801	HOUR METER -	1	-
6	574455401	SWITCH -	1	-
7	582107602	SWITCH -	1	-
8	574455501	KEY -	1	-
9	574206901	CABLE -	1	-
10	574207002	CABLE -	1	-

Ref.	Article N.	Description	Qty	Kit
11	539132624	KNOB -	1	-
12	575018101	CAP -	2	-
13	576978701	HUB CAP -	1	-
14	539103178	NUT CAP -	1	-
15	576618101	TANK VENT -	2	-
16	574235301	LOOM -	1	-
17	539102436	BATTERY -	1	-
18	577150501	SERVICE KIT -	1	-
19	522718701	CABLE -	1	-
20	522710701	CABLE -	1	-
21	525865401	TUBE ASSY -	2	-
22	587044533	HOSE -	1	-
23	587044530	HOSE -	1	-
24	587593401	HOSE ASSY -	1	-
25	532414114	FILTER -	2	-
26	576927001	MOUNT -	1	-
27	576926901	MOUNT -	1	-
28	510029902	BRACKET -	1	-
29	577104002	BRACKET -	1	-
30	588107201	BRACKET -	1	-
31	539102759	INSULATOR -	2	-
32	510064001	HOOK	2	-

Ref.	Article N.	Description	Qty	Kit
		-		
33	576618201	GROMMET -	2	-
34	539105245	GROMMET -	2	-
35	539105974	GROMMET -	1	-
36	539990580	SCREW -	1	-
37	872140506	BOLT -	2	-
38	539114341	SCREW -	3	-
39	574822701	SCREW -	4	-
40	539990997	NUT -	2	-
41	539976977	NUT -	4	-
42	539108120	NUT -	1	-
43	539112899	NUT, 5/16-18, NYLOC -	2	-
44	539990598	WASHER -	1	-
45	589670101	HARNESS *NOT SHOWN*	1	-
1	588127602	DECK -	1	-
2	575658403	DRIVE BELT -	1	-
3	539105711	BLADE -	3	-
4	510437502	BAFFLE -	1	-
5	539130646	PULLEY -	3	-
6	510015101	PULLEY -	1	-
7	525598201	PULLEY -	1	-
8	510019601	PULLEY -	1	-

Ref.	Article N.	Description	Qty	Kit
9	574722201	SERVICE KIT -	1	-
10	580943304	SPINDLE -	3	-
11	574169601	ROLLER -	5	-
12	510131202	SHIELD -	2	-
13	510254501	SHIELD -	2	-
14	510262201	SHIELD -	1	-
15	539976998	NIPPLE -	3	-
16	525310901	SPRING -	1	-
17	580942201	HUB -	3	-
18	539130638	BEARING -	6	-
19	510263701	BEARING -	3	-
20	522729701	BEARING -	1	-
21	539104763	CLIP -	8	-
22	574262102	GUIDE -	1	-
23	574262201	KEEPER -	1	-
24	580942501	CARRIER -	3	-
25	574197002	BRACKET -	1	-
26	525486002	BRACKET -	1	-
27	525485801	CHUTE -	1	-
28	580942701	V-RING -	3	-
29	580942301	SPACER -	3	-
30	525465601	SPACER	1	-

Ref.	Article N.	Description	Qty	Kit
		-		
31	574196401	TUBE -	2	-
32	574196501	TUBE -	1	-
33	580942601	SEAL -	6	-
34	539990209	SCREW -	8	-
35	539101686	SCREW -	1	-
36	539130315	BOLT -	9	-
37	574210601	SCREW -	18	-
38	525612801	SCREW -	2	-
39	539131781	BOLT -	2	-
40	874490512	BOLT -	3	-
41	539115620	1/4-20X3/4 CARR BLT -	4	-
42	539128101	BOLT -	1	-
43	574202001	BOLT -	1	-
44	539119007	SCREW -	3	-
45	539107271	SCREW -	1	-
46	510022401	BOLT -	1	-
47	510022301	SCREW -	3	-
48	539102933	SCREW -	3	-
49	539100472	SCREW -	2	-
50	521991101	NUT -	4	-
51	539130653	NUT -	3	-

Ref.	Article N.	Description	Qty	Kit
52	539976978	NUT -	4	-
53	521996501	NUT -	4	-
54	539112899	NUT, 5/16-18, NYLOC -	9	-
55	810030500	WASHER -	8	-
56	539109600	WASHER -	9	-
57	539990692	WASHER -	10	-
58	522023401	WASHER -	1	-
59	539106504	WASHER -	3	-
60	522829301	BLADE *OPTIONAL*	3	-
61	574481301	BLADE *OPTIONAL*	3	-
62	522936601	BLADE *OPTIONAL*	3	-
63	539109755	BLADE *OPTIONAL*	3	-
1	510408502	PLATE -	1	-
2	510408602	PLATE -	1	-
3	525822201	PLATE -	2	-
4	510089801	ROD -	2	-
5	510407601	ROD -	1	-
6	510406301	BAR -	1	-
7	510410703	SHAFT -	2	-
8	510409602	SHAFT -	1	-
9	510023601	SHAFT -	4	-
10	510023902	BLOCK	4	-

Ref.	Article N.	Description	Qty	Kit
		-		
11	510412301	PIVOT -	2	-
12	510407201	LATCH -	1	-
13	510406801	LATCH -	1	-
14	510089401	BUSHING -	4	-
15	510089201	BUSHING -	2	-
16	539916561	MACHINE BUSHING -	1	-
17	510029201	SPRING -	2	-
18	510376601	SPRING -	1	-
19	510376701	SPRING -	1	-
20	510106501	STRUT -	2	-
21	510406601	LINK -	1	-
22	510083801	BALL JOINT -	1	-
23	510407501	SWIVEL -	1	-
24	510406401	SWIVEL -	1	-
25	510362501	SPACER -	4	-
26	510408401	SPACER -	1	-
27	525465501	HEIGHT ADJUSTER -	1	-
27	510022502	ARM -	1	-
28	510410002	ARM -	4	-
29	525465501	HEIGHT ADJUSTER -	3	-
29	510022501	ARM -	1	-

Ref.	Article N.	Description	Qty	Kit
30	539102641	CHAIN -	4	-
31	510089501	PAD -	1	-
32	510406701	GUIDE -	1	-
33	510408301	PEDAL -	1	-
34	510407801	PEDAL -	1	-
35	510406501	CAP -	1	-
36	510090101	PIN -	8	-
37	510016501	PIN -	1	-
38	515988201	PIN -	2	-
39	539120993	EYE BOLT -	2	-
40	525822501	KEY -	4	-
41	539105069	RETAINER RING -	4	-
42	539990870	RING -	1	-
43	522705201	RING -	4	-
44	539101949	RETAINER RING -	2	-
45	539102454	RETAINER RING -	3	-
46	539912730	RING -	1	-
47	539990208	SCREW -	2	-
48	539122728	BOLT -	1	-
49	525828901	BOLT -	2	-
50	525465701	BOLT -	4	-
51	525822101	BOLT	4	-

Ref.	Article N.	Description	Qty	Kit
		-		
52	525612801	SCREW -	2	-
53	525829001	BOLT -	2	-
54	525465401	SCREW -	1	-
55	510408201	BOLT -	1	-
56	516035501	BOLT -	1	-
57	522705601	SCREW -	1	-
58	521996501	NUT -	4	-
59	539991112	NUT -	1	-
60	521991101	NUT -	3	-
61	525829101	NUT -	2	-
62	539990625	NUT -	4	-
63	539108677	NUT 3/4-10 HEX ZD -	2	-
64	539112899	NUT, 5/16-18, NYLOC -	8	-
65	539108732	NUT 3/8-24 HEX JAM ZD -	1	-
66	539990122	WASHER -	1	-
1	574805202	MOTOR *RT*	1	-
2	574805201	MOTOR *LT*	1	-
3	525851201	SHAFT	1	-
4	510025901	ARM	1	-
5	515980002	LEVER	1	-
6	539976526	HANDLE	1	-
7	539133047	CALIPER	2	-
8	525851601	PLATE	2	-
9	525851401	SWIVEL	1	-

Ref.	Article N.	Description	Qty	Kit
10	515980301	LINK	1	-
11	539113952	SPRING	1	-
12	525848701	HUB	2	-
13	539977465	BRACKET	1	-
14	539132161	BLADE BUSHING	6	-
15	510089201	BUSHING	2	-
16	539110631	5/16 DIA ROLL PIN	1	-
17	522705901	PIN	1	-
18	539102889	SPLIT PIN	2	-
19	872140610	BOLT	3	-
20	539923463	HCS 3/8-16 X 3-1/4 GR5 ZD	1	-
21	539104984	SCREW	1	-
22	516035501	BOLT	4	-
23	539108732	NUT 3/8-24 HEX JAM ZD	3	-
24	539115617	NUT	1	-
25	521996501	NUT	1	-
26	539200282	NUT	9	-
27	521991101	NUT	8	-
28	819131316	WASHER	1	-
29	525490901	WASHER	2	-
30	539912063	WASHER	1	-
31	539133007	WASHER	2	-
1	501552801	SEAT -	1	-
2	510039302	PAN -	1	-
3	539119741	SWITCH -	1	-
4	539130359	BELT -	1	-
5	510064101	ROD -	1	-
6	585857402	BRACKET -	1	-
7	520283101	SPRING -	1	-
8	510283801	BUMPER -	2	-
9	539913847	BOLT -	2	-

Ref.	Article N.	Description	Qty	Kit
10	539113226	BOLT -	4	-
11	515990601	BOLT -	2	-
12	525834201	SCREW -	2	-
13	521996501	NUT -	4	-
14	539112899	NUT, 5/16-18, NYLOC -	6	-
1	516020301	DAMPER -	2	-
2	525447901	STRUT -	1	-
3	539113792	SWITCH -	1	-
4	532109553	SWITCH -	2	-
5	539131518	BEARING -	4	-
6	586737202	BRACKET -	2	-
7	501741101	BRACKET -	2	-
8	574269401	LEVER -	2	-
9	577042403	SERVICE KIT -	1	-
10	577042303	SERVICE KIT -	1	-
11	576140302	LEVER -	2	-
12	539109149	CONNECTOR -	4	-
12	539112899	NUT, 5/16-18, NYLOC -	6	-
13	539102590	BALL JOINT -	4	-
14	539102845	SPRING -	1	-
15	539020035	SPRING -	1	-
16	576850301	SPRING	1	-

Ref.	Article N.	Description	Qty	Kit
		-		
17	577252401	SPACER -	2	-
18	511594901	BUSHING -	1	-
19	511595001	LINK -	1	-
20	539110607	STUD -	2	-
21	539130894	GRIP -	2	-
22	575811501	BUMPER -	2	-
23	539131799	KNOB -	1	-
24	522559201	LINKAGE -	2	-
25	522842801	LINKAGE -	2	-
26	581437501	BLOCK -	2	-
27	581223001	PLATE -	2	-
28	539976988	PIN -	4	-
29	539104763	CLIP -	4	-
30	872110406	BOLT -	1	-
31	539990316	BOLT -	2	-
32	525544001	BOLT -	4	-
33	874780844	BOLT -	2	-
34	525612801	SCREW -	4	-
35	874780520	BOLT -	1	-
36	874490512	BOLT -	4	-
37	576850402	SCREW -	2	-

Ref.	Article N.	Description	Qty	Kit
38	574822701	SCREW -	6	-
39	539112899	NUT, 5/16-18, NYLOC -	1	-
40	539990223	NUT -	4	-
41	539108120	NUT -	4	-
42	539108010	NUT -	2	-
43	539913847	BOLT -	2	-
44	539990717	NUT -	2	-
46	539108732	NUT 3/8-24 HEX JAM ZD -	4	-
47	539990187	WASHER -	2	-
48	819131316	WASHER -	4	-
49	539990692	WASHER -	4	-
50	539127046	NUT -	1	-
50	819111116	WASHER -	4	-
1	510154601	TIRE -	2	-
2	510154501	TIRE -	2	-
3	539105152	TIRE -	2	-
4	510154502	WHEEL RIM -	2	-
5	525611902	FORK -	2	-
6	539105518	SPACER -	4	-
7	510034301	SEAL -	2	-
8	510034403	BEARING -	4	-
9	539101474	NIPPLE	2	-

Ref.	Article N.	Description	Qty	Kit
		-		
10	510034001	CAP -	2	-
11	539105517	BOLT -	2	-
12	521991101	NUT -	2	-
13	522842601	NUT -	2	-
14	539101173	NUT -	8	-
15	539990250	WASHER -	2	-
16	574824701	WASHER -	2	-
18	539105521	WHEEL ASSY *PNEUMATIC*	2	-
1	510246602	DECAL *CONSOLE*	1	-
2	516038101	DECAL *HEIGHT*	1	-
3	525349701	DECAL *HEIGHT*	1	-
4	532424102	DECAL *SPARK ARRESTOR*	1	-
5	532428676	DECAL *CROWN H SM*	1	-
6	532429196	DECAL *HUSQVARNA*	2	-
7	589283001	DECAL *MOTION CONTROL*	2	-
8	539105744	DECAL *BELT DRIVE WARN*	1	-
9	539105745	DECAL *BATTERY WARNING*	1	-
10	539105746	DECAL *SEVERING*	1	-
11	539107959	DECAL *WARNING*	1	-
12	585142601	DECAL *TRACKING*	2	-
13	585148801	DECAL *PARK BRAKE*	1	-

Ref.	Article N.	Description	Qty	Kit
14	574437301	DECAL *BELT ROUTE*	1	-
15	574455001	DECAL *CROWN LG*	1	-
16	574569401	DECAL *FUSE*	1	-
17	574569002	DECAL *ROPS WARNING*	1	-
18	574569006	DECAL *ROPS*	1	-
19	574825901	DECAL *SERVICE*	1	-
20	577150101	DECAL *FUEL VALVE*	1	-
21	581384401	DECAL *PZ 60*	1	-
22	581724301	DECAL *NO STEP*	2	-
23	581724401	DECAL *DEFLECTOR*	1	-
24	584904601	DECAL *BLADE WARNING*	1	-
25	539101881	DECAL *EXHAUST WARNING*	1	-

WHEELS AND TIRES

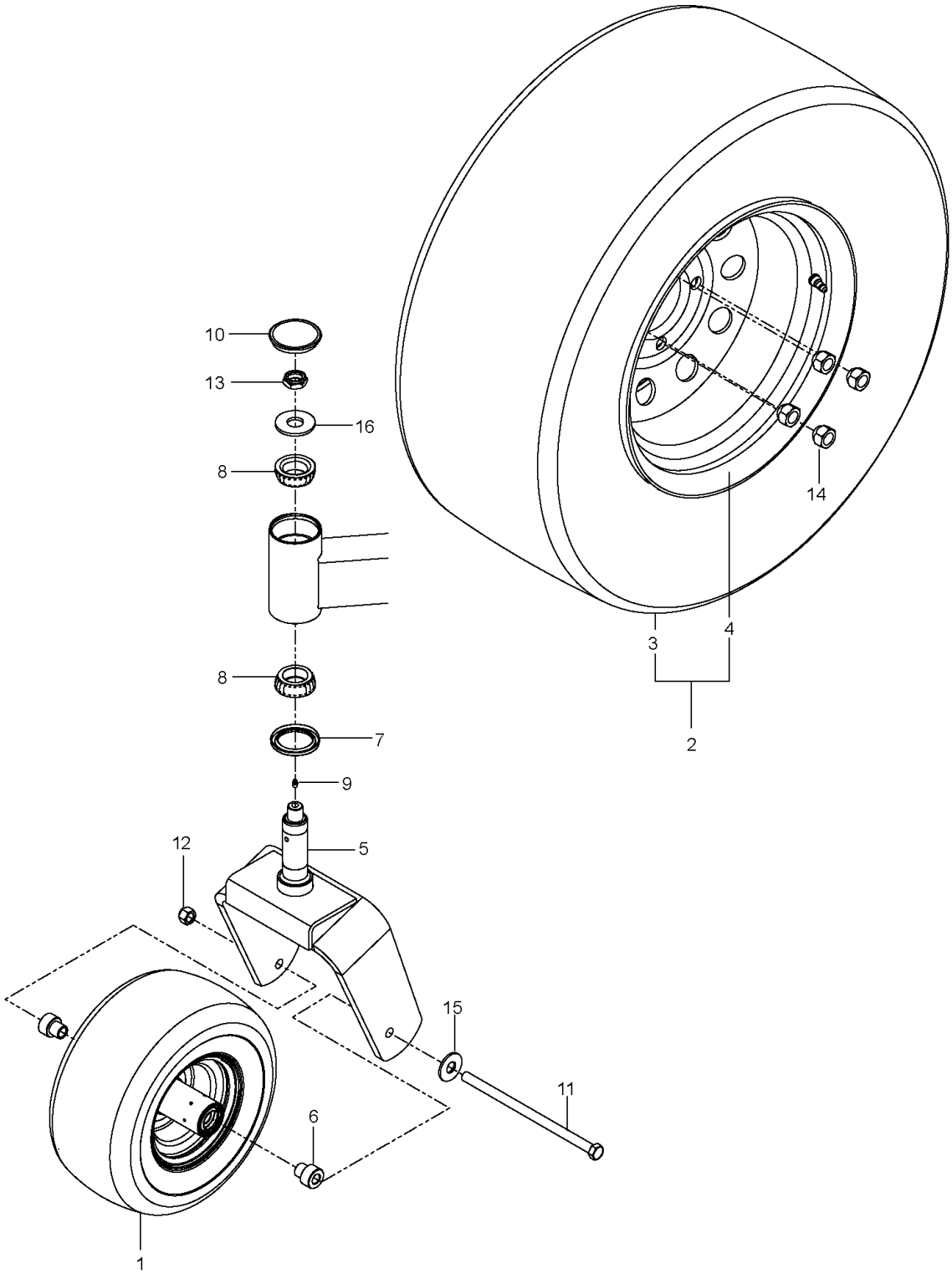

Ref.	Article N.	Description	Qty	Kit
1	510004602	PLATE -	1	-
2	510019801	PULLEY -	1	-
3	525750301	MUFFLER -	1	-

Ref.	Article N.	Description	Qty	Kit
4	525749501	CLUTCH -	1	-
5	522676702	STOP -	1	-
6	539119680	ADAPTER -	1	-
7	539118911	NIPPLE -	1	-
8	539105072	90DEG.ELBOW 3/8NPT -	1	-
9	522837001	PLUG -	1	-
10	587044814	HOSE -	1	-
11	525749901	KEY -	1	-
12	539109618	O-RING -	1	-
13	539912222	CLAMP -	2	-
14	505280001	TIE WRAP -	1	-
15	874780716	BOLT -	1	-
16	581332801	BOLT -	1	-
17	532150406	BOLT -	4	-
18	574233801	SCREW -	3	-
19	872140508	BOLT -	3	-
20	539103153	NUT -	1	-
21	539112899	NUT, 5/16-18, NYLOC -	8	-
22	539102582	NUT -	1	-
23	539990247	WASHER -	1	-
24	539102593	WASHER -	4	-
25	539125626	WASHER	1	-

Ref.	Article N.	Description	Qty	Kit
		-		
26	525554201	HARNESS *NOT SHOWN*	1	-
27	574825801	KIT *SPARK ARRESTOR*	1	-
28	586839701	GASKET -	2	-
1	574482802	FRAME *w/ SAFETY DECALS*	1	-
2	574215602	PLATE *ORG*	1	-
3	574215702	PLATE *ORG*	1	-
4	522675702	BUMPER *ORG*	1	-
5	587898002	GUARD *GRY*	1	-
6	574228602	PLATE *GRY*	1	-
7	577327702	FRAME -	1	-
8	529279603	MOUNT -	1	-
9	529279703	MOUNT -	1	-
10	529279903	MOUNT -	1	-
11	529280003	MOUNT -	1	-
12	510082101	MOUNT -	4	-
13	510083201	MOUNT -	4	-
14	510040301	BRACKET -	2	-
15	539102845	SPRING -	4	-
16	574388001	PIN -	2	-
17	539200715	PIN -	2	-
18	575811501	BUMPER -	2	-

Ref.	Article N.	Description	Qty	Kit
19	522801401	BUMPER -	4	-
20	539102502	STUD -	4	-
21	539109867	CLAMP -	1	-
22	539131780	BOLT -	2	-
23	525544001	BOLT -	2	-
24	874490512	BOLT -	14	-
25	874490632	SCREW -	4	-
26	525612801	SCREW -	4	-
27	574233801	SCREW -	2	-
28	580754601	BOLT -	6	-
29	539100145	BOLT -	2	-
30	817490508	SCREW -	6	-
31	817490516	SCREW -	7	-
32	539111028	NUTSERT 5/16-18 THICK GRIP -	2	-
33	521996501	NUT -	8	-
34	539108120	NUT -	2	-
35	539112899	NUT, 5/16-18, NYLOC -	22	-
36	525829101	NUT -	6	-
37	873800400	NUT -	4	-
38	539102653	WASHER -	6	-
39	539109600	WASHER -	6	-
40	819111116	WASHER	4	-

Ref.	Article N.	Description	Qty	Kit
		-		
41	539111897	WASHER -	4	-
42	576738801	KIT -	1	-
1	506007902	FRAME -	1	-
2	573978301	DRIVE BELT -	1	-
3	576035902	RESERVOIR -	1	-
4	522805401	FILTER -	1	-
5	506120501	PUMP *LT*	1	-
6	506120401	PUMP *RT*	1	-
7	510019002	PULLEY -	2	-
8	510283702	PULLEY -	1	-
9	525435601	PIVOT -	1	-
10	510206301	PIVOT -	1	-
11	510041603	ARM -	1	-
12	522805001	TUBE -	1	-
13	510254501	SHIELD -	1	-
14	539114662	SHIELD, DUST -	1	-
15	574398502	SHIELD -	2	-
16	577437201	SPRING -	1	-
17	576577701	ASSEMBLY -	2	-
18	539101242	ELBOW -	1	-
19	539103316	CONNECTION -	2	-

Ref.	Article N.	Description	Qty	Kit
20	539101239	CONNECTOR -	4	-
21	539101237	CONNECTION -	7	-
22	510013601	LINE -	1	-
23	510013701	LINE -	1	-
24	510013801	LINE -	1	-
25	510013901	LINE -	1	-
26	510014001	LINE -	1	-
27	510014501	LINE -	2	-
28	510010701	LINE -	1	-
29	575872301	HEAD -	1	-
30	522805301	CAP -	1	-
31	539105168	CAP -	1	-
32	539101177	KEY -	2	-
33	872140506	BOLT -	4	-
34	872140610	BOLT -	1	-
35	872140622	BOLT -	1	-
36	872140512	BOLT -	1	-
37	874780844	BOLT -	8	-
38	525544801	SCREW -	4	-
39	525834201	SCREW -	4	-
40	817490516	SCREW -	2	-
41	539990072	SCREW	2	-

Ref.	Article N.	Description	Qty	Kit
		-		
42	539103433	SCREW -	1	-
43	539102717	SCREW -	4	-
44	539990613	NUT -	1	-
45	539112899	NUT, 5/16-18, NYLOC -	5	-
46	521996501	NUT -	4	-
47	539200282	NUT -	4	-
48	521991101	NUT -	5	-
49	539115528	1/2` CONTACT BELLSPR -	1	-
50	522023401	WASHER -	1	-
51	539990052	WASHER -	2	-
52	819182212	WASHER -	1	-
1	584280401	FUEL TANK ASSY -	1	-
2	584280301	FUEL TANK ASSY -	1	-
3	529280202	PANEL -	1	-
4	574514001	TIMER -	1	-
5	586161801	HOUR METER -	1	-
6	574455401	SWITCH -	1	-
7	582107602	SWITCH -	1	-
8	574455501	KEY -	1	-
9	574206901	CABLE -	1	-
10	574207002	CABLE -	1	-

Ref.	Article N.	Description	Qty	Kit
11	539132624	KNOB -	1	-
12	575018101	CAP -	2	-
13	576978701	HUB CAP -	1	-
14	539103178	NUT CAP -	1	-
15	576618101	TANK VENT -	2	-
16	574235301	LOOM -	1	-
17	539102436	BATTERY -	1	-
18	577150501	SERVICE KIT -	1	-
19	522718701	CABLE -	1	-
20	522710701	CABLE -	1	-
21	525865401	TUBE ASSY -	2	-
22	587044533	HOSE -	1	-
23	587044530	HOSE -	1	-
24	587593401	HOSE ASSY -	1	-
25	532414114	FILTER -	2	-
26	576927001	MOUNT -	1	-
27	576926901	MOUNT -	1	-
28	510029902	BRACKET -	1	-
29	577104002	BRACKET -	1	-
30	588107201	BRACKET -	1	-
31	539102759	INSULATOR -	2	-
32	510064001	HOOK	2	-

Ref.	Article N.	Description	Qty	Kit
		-		
33	576618201	GROMMET -	2	-
34	539105245	GROMMET -	2	-
35	539105974	GROMMET -	1	-
36	539990580	SCREW -	1	-
37	872140506	BOLT -	2	-
38	539114341	SCREW -	3	-
39	574822701	SCREW -	4	-
40	539990997	NUT -	2	-
41	539976977	NUT -	4	-
42	539108120	NUT -	1	-
43	539112899	NUT, 5/16-18, NYLOC -	2	-
44	539990598	WASHER -	1	-
45	589670101	HARNESS *NOT SHOWN*	1	-
1	588127602	DECK -	1	-
2	575658403	DRIVE BELT -	1	-
3	539105711	BLADE -	3	-
4	510437502	BAFFLE -	1	-
5	539130646	PULLEY -	3	-
6	510015101	PULLEY -	1	-
7	525598201	PULLEY -	1	-
8	510019601	PULLEY -	1	-

Ref.	Article N.	Description	Qty	Kit
9	574722201	SERVICE KIT -	1	-
10	580943304	SPINDLE -	3	-
11	574169601	ROLLER -	5	-
12	510131202	SHIELD -	2	-
13	510254501	SHIELD -	2	-
14	510262201	SHIELD -	1	-
15	539976998	NIPPLE -	3	-
16	525310901	SPRING -	1	-
17	580942201	HUB -	3	-
18	539130638	BEARING -	6	-
19	510263701	BEARING -	3	-
20	522729701	BEARING -	1	-
21	539104763	CLIP -	8	-
22	574262102	GUIDE -	1	-
23	574262201	KEEPER -	1	-
24	580942501	CARRIER -	3	-
25	574197002	BRACKET -	1	-
26	525486002	BRACKET -	1	-
27	525485801	CHUTE -	1	-
28	580942701	V-RING -	3	-
29	580942301	SPACER -	3	-
30	525465601	SPACER	1	-

Ref.	Article N.	Description	Qty	Kit
		-		
31	574196401	TUBE -	2	-
32	574196501	TUBE -	1	-
33	580942601	SEAL -	6	-
34	539990209	SCREW -	8	-
35	539101686	SCREW -	1	-
36	539130315	BOLT -	9	-
37	574210601	SCREW -	18	-
38	525612801	SCREW -	2	-
39	539131781	BOLT -	2	-
40	874490512	BOLT -	3	-
41	539115620	1/4-20X3/4 CARR BLT -	4	-
42	539128101	BOLT -	1	-
43	574202001	BOLT -	1	-
44	539119007	SCREW -	3	-
45	539107271	SCREW -	1	-
46	510022401	BOLT -	1	-
47	510022301	SCREW -	3	-
48	539102933	SCREW -	3	-
49	539100472	SCREW -	2	-
50	521991101	NUT -	4	-
51	539130653	NUT -	3	-

Ref.	Article N.	Description	Qty	Kit
52	539976978	NUT -	4	-
53	521996501	NUT -	4	-
54	539112899	NUT, 5/16-18, NYLOC -	9	-
55	810030500	WASHER -	8	-
56	539109600	WASHER -	9	-
57	539990692	WASHER -	10	-
58	522023401	WASHER -	1	-
59	539106504	WASHER -	3	-
60	522829301	BLADE *OPTIONAL*	3	-
61	574481301	BLADE *OPTIONAL*	3	-
62	522936601	BLADE *OPTIONAL*	3	-
63	539109755	BLADE *OPTIONAL*	3	-
1	510408502	PLATE -	1	-
2	510408602	PLATE -	1	-
3	525822201	PLATE -	2	-
4	510089801	ROD -	2	-
5	510407601	ROD -	1	-
6	510406301	BAR -	1	-
7	510410703	SHAFT -	2	-
8	510409602	SHAFT -	1	-
9	510023601	SHAFT -	4	-
10	510023902	BLOCK	4	-

Ref.	Article N.	Description	Qty	Kit
		-		
11	510412301	PIVOT -	2	-
12	510407201	LATCH -	1	-
13	510406801	LATCH -	1	-
14	510089401	BUSHING -	4	-
15	510089201	BUSHING -	2	-
16	539916561	MACHINE BUSHING -	1	-
17	510029201	SPRING -	2	-
18	510376601	SPRING -	1	-
19	510376701	SPRING -	1	-
20	510106501	STRUT -	2	-
21	510406601	LINK -	1	-
22	510083801	BALL JOINT -	1	-
23	510407501	SWIVEL -	1	-
24	510406401	SWIVEL -	1	-
25	510362501	SPACER -	4	-
26	510408401	SPACER -	1	-
27	525465501	HEIGHT ADJUSTER -	1	-
27	510022502	ARM -	1	-
28	510410002	ARM -	4	-
29	525465501	HEIGHT ADJUSTER -	3	-
29	510022501	ARM -	1	-

Ref.	Article N.	Description	Qty	Kit
30	539102641	CHAIN -	4	-
31	510089501	PAD -	1	-
32	510406701	GUIDE -	1	-
33	510408301	PEDAL -	1	-
34	510407801	PEDAL -	1	-
35	510406501	CAP -	1	-
36	510090101	PIN -	8	-
37	510016501	PIN -	1	-
38	515988201	PIN -	2	-
39	539120993	EYE BOLT -	2	-
40	525822501	KEY -	4	-
41	539105069	RETAINER RING -	4	-
42	539990870	RING -	1	-
43	522705201	RING -	4	-
44	539101949	RETAINER RING -	2	-
45	539102454	RETAINER RING -	3	-
46	539912730	RING -	1	-
47	539990208	SCREW -	2	-
48	539122728	BOLT -	1	-
49	525828901	BOLT -	2	-
50	525465701	BOLT -	4	-
51	525822101	BOLT	4	-

Ref.	Article N.	Description	Qty	Kit
		-		
52	525612801	SCREW -	2	-
53	525829001	BOLT -	2	-
54	525465401	SCREW -	1	-
55	510408201	BOLT -	1	-
56	516035501	BOLT -	1	-
57	522705601	SCREW -	1	-
58	521996501	NUT -	4	-
59	539991112	NUT -	1	-
60	521991101	NUT -	3	-
61	525829101	NUT -	2	-
62	539990625	NUT -	4	-
63	539108677	NUT 3/4-10 HEX ZD -	2	-
64	539112899	NUT, 5/16-18, NYLOC -	8	-
65	539108732	NUT 3/8-24 HEX JAM ZD -	1	-
66	539990122	WASHER -	1	-
1	574805202	MOTOR *RT*	1	-
2	574805201	MOTOR *LT*	1	-
3	525851201	SHAFT	1	-
4	510025901	ARM	1	-
5	515980002	LEVER	1	-
6	539976526	HANDLE	1	-
7	539133047	CALIPER	2	-
8	525851601	PLATE	2	-
9	525851401	SWIVEL	1	-

Ref.	Article N.	Description	Qty	Kit
10	515980301	LINK	1	-
11	539113952	SPRING	1	-
12	525848701	HUB	2	-
13	539977465	BRACKET	1	-
14	539132161	BLADE BUSHING	6	-
15	510089201	BUSHING	2	-
16	539110631	5/16 DIA ROLL PIN	1	-
17	522705901	PIN	1	-
18	539102889	SPLIT PIN	2	-
19	872140610	BOLT	3	-
20	539923463	HCS 3/8-16 X 3-1/4 GR5 ZD	1	-
21	539104984	SCREW	1	-
22	516035501	BOLT	4	-
23	539108732	NUT 3/8-24 HEX JAM ZD	3	-
24	539115617	NUT	1	-
25	521996501	NUT	1	-
26	539200282	NUT	9	-
27	521991101	NUT	8	-
28	819131316	WASHER	1	-
29	525490901	WASHER	2	-
30	539912063	WASHER	1	-
31	539133007	WASHER	2	-
1	501552801	SEAT -	1	-
2	510039302	PAN -	1	-
3	539119741	SWITCH -	1	-
4	539130359	BELT -	1	-
5	510064101	ROD -	1	-
6	585857402	BRACKET -	1	-
7	520283101	SPRING -	1	-
8	510283801	BUMPER -	2	-
9	539913847	BOLT -	2	-

Ref.	Article N.	Description	Qty	Kit
10	539113226	BOLT -	4	-
11	515990601	BOLT -	2	-
12	525834201	SCREW -	2	-
13	521996501	NUT -	4	-
14	539112899	NUT, 5/16-18, NYLOC -	6	-
1	516020301	DAMPER -	2	-
2	525447901	STRUT -	1	-
3	539113792	SWITCH -	1	-
4	532109553	SWITCH -	2	-
5	539131518	BEARING -	4	-
6	586737202	BRACKET -	2	-
7	501741101	BRACKET -	2	-
8	574269401	LEVER -	2	-
9	577042403	SERVICE KIT -	1	-
10	577042303	SERVICE KIT -	1	-
11	576140302	LEVER -	2	-
12	539109149	CONNECTOR -	4	-
12	539112899	NUT, 5/16-18, NYLOC -	6	-
13	539102590	BALL JOINT -	4	-
14	539102845	SPRING -	1	-
15	539020035	SPRING -	1	-
16	576850301	SPRING	1	-

Ref.	Article N.	Description	Qty	Kit
		-		
17	577252401	SPACER -	2	-
18	511594901	BUSHING -	1	-
19	511595001	LINK -	1	-
20	539110607	STUD -	2	-
21	539130894	GRIP -	2	-
22	575811501	BUMPER -	2	-
23	539131799	KNOB -	1	-
24	522559201	LINKAGE -	2	-
25	522842801	LINKAGE -	2	-
26	581437501	BLOCK -	2	-
27	581223001	PLATE -	2	-
28	539976988	PIN -	4	-
29	539104763	CLIP -	4	-
30	872110406	BOLT -	1	-
31	539990316	BOLT -	2	-
32	525544001	BOLT -	4	-
33	874780844	BOLT -	2	-
34	525612801	SCREW -	4	-
35	874780520	BOLT -	1	-
36	874490512	BOLT -	4	-
37	576850402	SCREW -	2	-

Ref.	Article N.	Description	Qty	Kit
38	574822701	SCREW -	6	-
39	539112899	NUT, 5/16-18, NYLOC -	1	-
40	539990223	NUT -	4	-
41	539108120	NUT -	4	-
42	539108010	NUT -	2	-
43	539913847	BOLT -	2	-
44	539990717	NUT -	2	-
46	539108732	NUT 3/8-24 HEX JAM ZD -	4	-
47	539990187	WASHER -	2	-
48	819131316	WASHER -	4	-
49	539990692	WASHER -	4	-
50	539127046	NUT -	1	-
50	819111116	WASHER -	4	-
1	510154601	TIRE -	2	-
2	510154501	TIRE -	2	-
3	539105152	TIRE -	2	-
4	510154502	WHEEL RIM -	2	-
5	525611902	FORK -	2	-
6	539105518	SPACER -	4	-
7	510034301	SEAL -	2	-
8	510034403	BEARING -	4	-
9	539101474	NIPPLE	2	-

Ref.	Article N.	Description	Qty	Kit
		-		
10	510034001	CAP -	2	-
11	539105517	BOLT -	2	-
12	521991101	NUT -	2	-
13	522842601	NUT -	2	-
14	539101173	NUT -	8	-
15	539990250	WASHER -	2	-
16	574824701	WASHER -	2	-
18	539105521	WHEEL ASSY *PNEUMATIC*	2	-
1	510246602	DECAL *CONSOLE*	1	-
2	516038101	DECAL *HEIGHT*	1	-
3	525349701	DECAL *HEIGHT*	1	-
4	532424102	DECAL *SPARK ARRESTOR*	1	-
5	532428676	DECAL *CROWN H SM*	1	-
6	532429196	DECAL *HUSQVARNA*	2	-
7	589283001	DECAL *MOTION CONTROL*	2	-
8	539105744	DECAL *BELT DRIVE WARN*	1	-
9	539105745	DECAL *BATTERY WARNING*	1	-
10	539105746	DECAL *SEVERING*	1	-
11	539107959	DECAL *WARNING*	1	-
12	585142601	DECAL *TRACKING*	2	-
13	585148801	DECAL *PARK BRAKE*	1	-

Ref.	Article N.	Description	Qty	Kit
14	574437301	DECAL *BELT ROUTE*	1	-
15	574455001	DECAL *CROWN LG*	1	-
16	574569401	DECAL *FUSE*	1	-
17	574569002	DECAL *ROPS WARNING*	1	-
18	574569006	DECAL *ROPS*	1	-
19	574825901	DECAL *SERVICE*	1	-
20	577150101	DECAL *FUEL VALVE*	1	-
21	581384401	DECAL *PZ 60*	1	-
22	581724301	DECAL *NO STEP*	2	-
23	581724401	DECAL *DEFLECTOR*	1	-
24	584904601	DECAL *BLADE WARNING*	1	-
25	539101881	DECAL *EXHAUST WARNING*	1	-

DECALS

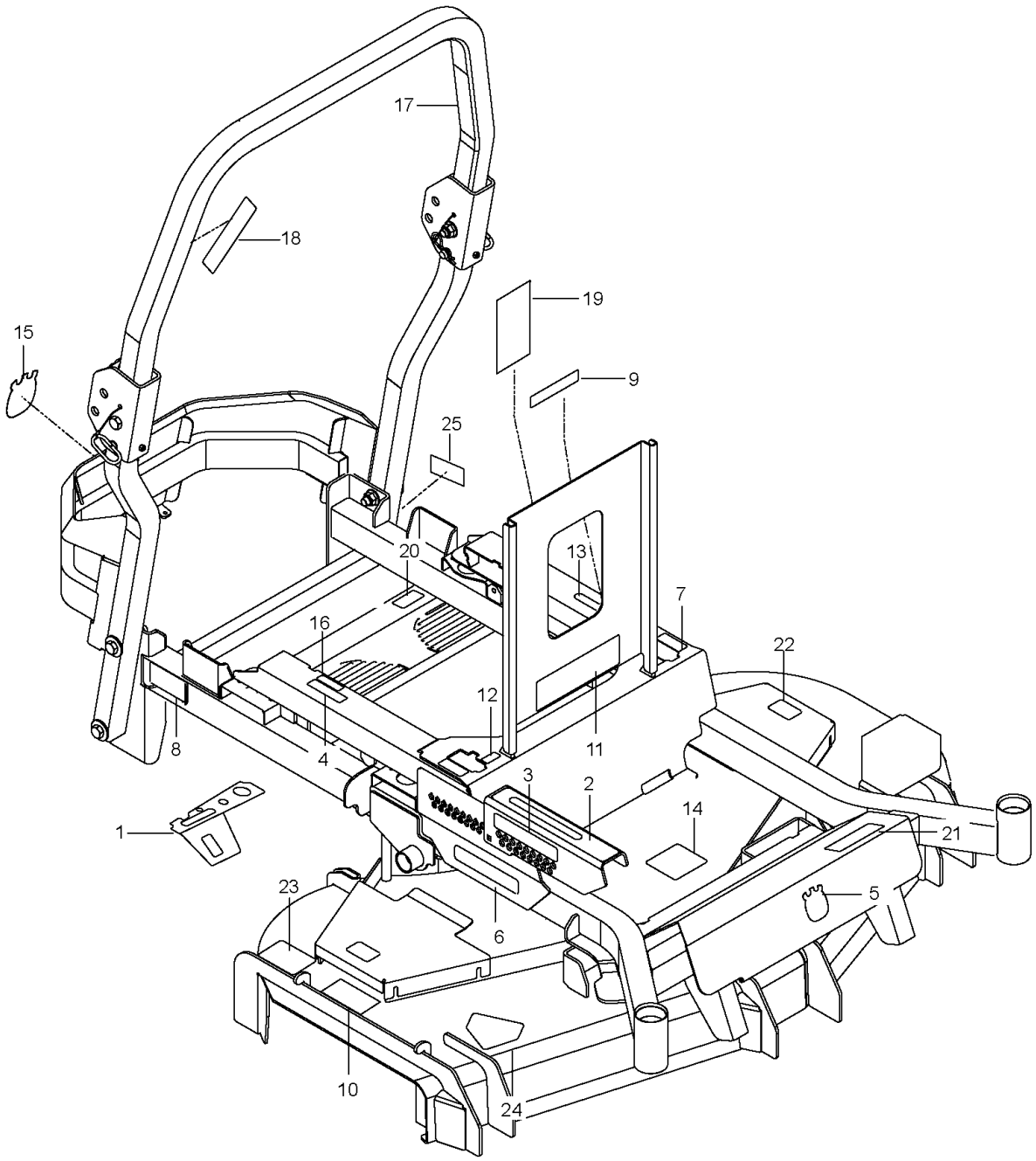

Ref.	Article N.	Description	Qty	Kit
1	510004602	PLATE -	1	-
2	510019801	PULLEY -	1	-
3	525750301	MUFFLER -	1	-

Ref.	Article N.	Description	Qty	Kit
4	525749501	CLUTCH -	1	-
5	522676702	STOP -	1	-
6	539119680	ADAPTER -	1	-
7	539118911	NIPPLE -	1	-
8	539105072	90DEG.ELBOW 3/8NPT -	1	-
9	522837001	PLUG -	1	-
10	587044814	HOSE -	1	-
11	525749901	KEY -	1	-
12	539109618	O-RING -	1	-
13	539912222	CLAMP -	2	-
14	505280001	TIE WRAP -	1	-
15	874780716	BOLT -	1	-
16	581332801	BOLT -	1	-
17	532150406	BOLT -	4	-
18	574233801	SCREW -	3	-
19	872140508	BOLT -	3	-
20	539103153	NUT -	1	-
21	539112899	NUT, 5/16-18, NYLOC -	8	-
22	539102582	NUT -	1	-
23	539990247	WASHER -	1	-
24	539102593	WASHER -	4	-
25	539125626	WASHER	1	-

Ref.	Article N.	Description	Qty	Kit
		-		
26	525554201	HARNESS *NOT SHOWN*	1	-
27	574825801	KIT *SPARK ARRESTOR*	1	-
28	586839701	GASKET -	2	-
1	574482802	FRAME *w/ SAFETY DECALS*	1	-
2	574215602	PLATE *ORG*	1	-
3	574215702	PLATE *ORG*	1	-
4	522675702	BUMPER *ORG*	1	-
5	587898002	GUARD *GRY*	1	-
6	574228602	PLATE *GRY*	1	-
7	577327702	FRAME -	1	-
8	529279603	MOUNT -	1	-
9	529279703	MOUNT -	1	-
10	529279903	MOUNT -	1	-
11	529280003	MOUNT -	1	-
12	510082101	MOUNT -	4	-
13	510083201	MOUNT -	4	-
14	510040301	BRACKET -	2	-
15	539102845	SPRING -	4	-
16	574388001	PIN -	2	-
17	539200715	PIN -	2	-
18	575811501	BUMPER -	2	-

Ref.	Article N.	Description	Qty	Kit
19	522801401	BUMPER -	4	-
20	539102502	STUD -	4	-
21	539109867	CLAMP -	1	-
22	539131780	BOLT -	2	-
23	525544001	BOLT -	2	-
24	874490512	BOLT -	14	-
25	874490632	SCREW -	4	-
26	525612801	SCREW -	4	-
27	574233801	SCREW -	2	-
28	580754601	BOLT -	6	-
29	539100145	BOLT -	2	-
30	817490508	SCREW -	6	-
31	817490516	SCREW -	7	-
32	539111028	NUTSERT 5/16-18 THICK GRIP -	2	-
33	521996501	NUT -	8	-
34	539108120	NUT -	2	-
35	539112899	NUT, 5/16-18, NYLOC -	22	-
36	525829101	NUT -	6	-
37	873800400	NUT -	4	-
38	539102653	WASHER -	6	-
39	539109600	WASHER -	6	-
40	819111116	WASHER	4	-

Ref.	Article N.	Description	Qty	Kit
		-		
41	539111897	WASHER -	4	-
42	576738801	KIT -	1	-
1	506007902	FRAME -	1	-
2	573978301	DRIVE BELT -	1	-
3	576035902	RESERVOIR -	1	-
4	522805401	FILTER -	1	-
5	506120501	PUMP *LT*	1	-
6	506120401	PUMP *RT*	1	-
7	510019002	PULLEY -	2	-
8	510283702	PULLEY -	1	-
9	525435601	PIVOT -	1	-
10	510206301	PIVOT -	1	-
11	510041603	ARM -	1	-
12	522805001	TUBE -	1	-
13	510254501	SHIELD -	1	-
14	539114662	SHIELD, DUST -	1	-
15	574398502	SHIELD -	2	-
16	577437201	SPRING -	1	-
17	576577701	ASSEMBLY -	2	-
18	539101242	ELBOW -	1	-
19	539103316	CONNECTION -	2	-

Ref.	Article N.	Description	Qty	Kit
20	539101239	CONNECTOR -	4	-
21	539101237	CONNECTION -	7	-
22	510013601	LINE -	1	-
23	510013701	LINE -	1	-
24	510013801	LINE -	1	-
25	510013901	LINE -	1	-
26	510014001	LINE -	1	-
27	510014501	LINE -	2	-
28	510010701	LINE -	1	-
29	575872301	HEAD -	1	-
30	522805301	CAP -	1	-
31	539105168	CAP -	1	-
32	539101177	KEY -	2	-
33	872140506	BOLT -	4	-
34	872140610	BOLT -	1	-
35	872140622	BOLT -	1	-
36	872140512	BOLT -	1	-
37	874780844	BOLT -	8	-
38	525544801	SCREW -	4	-
39	525834201	SCREW -	4	-
40	817490516	SCREW -	2	-
41	539990072	SCREW	2	-

Ref.	Article N.	Description	Qty	Kit
		-		
42	539103433	SCREW -	1	-
43	539102717	SCREW -	4	-
44	539990613	NUT -	1	-
45	539112899	NUT, 5/16-18, NYLOC -	5	-
46	521996501	NUT -	4	-
47	539200282	NUT -	4	-
48	521991101	NUT -	5	-
49	539115528	1/2` CONTACT BELLSPR -	1	-
50	522023401	WASHER -	1	-
51	539990052	WASHER -	2	-
52	819182212	WASHER -	1	-
1	584280401	FUEL TANK ASSY -	1	-
2	584280301	FUEL TANK ASSY -	1	-
3	529280202	PANEL -	1	-
4	574514001	TIMER -	1	-
5	586161801	HOUR METER -	1	-
6	574455401	SWITCH -	1	-
7	582107602	SWITCH -	1	-
8	574455501	KEY -	1	-
9	574206901	CABLE -	1	-
10	574207002	CABLE -	1	-

Ref.	Article N.	Description	Qty	Kit
11	539132624	KNOB -	1	-
12	575018101	CAP -	2	-
13	576978701	HUB CAP -	1	-
14	539103178	NUT CAP -	1	-
15	576618101	TANK VENT -	2	-
16	574235301	LOOM -	1	-
17	539102436	BATTERY -	1	-
18	577150501	SERVICE KIT -	1	-
19	522718701	CABLE -	1	-
20	522710701	CABLE -	1	-
21	525865401	TUBE ASSY -	2	-
22	587044533	HOSE -	1	-
23	587044530	HOSE -	1	-
24	587593401	HOSE ASSY -	1	-
25	532414114	FILTER -	2	-
26	576927001	MOUNT -	1	-
27	576926901	MOUNT -	1	-
28	510029902	BRACKET -	1	-
29	577104002	BRACKET -	1	-
30	588107201	BRACKET -	1	-
31	539102759	INSULATOR -	2	-
32	510064001	HOOK	2	-

Ref.	Article N.	Description	Qty	Kit
		-		
33	576618201	GROMMET -	2	-
34	539105245	GROMMET -	2	-
35	539105974	GROMMET -	1	-
36	539990580	SCREW -	1	-
37	872140506	BOLT -	2	-
38	539114341	SCREW -	3	-
39	574822701	SCREW -	4	-
40	539990997	NUT -	2	-
41	539976977	NUT -	4	-
42	539108120	NUT -	1	-
43	539112899	NUT, 5/16-18, NYLOC -	2	-
44	539990598	WASHER -	1	-
45	589670101	HARNESS *NOT SHOWN*	1	-
1	588127602	DECK -	1	-
2	575658403	DRIVE BELT -	1	-
3	539105711	BLADE -	3	-
4	510437502	BAFFLE -	1	-
5	539130646	PULLEY -	3	-
6	510015101	PULLEY -	1	-
7	525598201	PULLEY -	1	-
8	510019601	PULLEY -	1	-

Ref.	Article N.	Description	Qty	Kit
9	574722201	SERVICE KIT -	1	-
10	580943304	SPINDLE -	3	-
11	574169601	ROLLER -	5	-
12	510131202	SHIELD -	2	-
13	510254501	SHIELD -	2	-
14	510262201	SHIELD -	1	-
15	539976998	NIPPLE -	3	-
16	525310901	SPRING -	1	-
17	580942201	HUB -	3	-
18	539130638	BEARING -	6	-
19	510263701	BEARING -	3	-
20	522729701	BEARING -	1	-
21	539104763	CLIP -	8	-
22	574262102	GUIDE -	1	-
23	574262201	KEEPER -	1	-
24	580942501	CARRIER -	3	-
25	574197002	BRACKET -	1	-
26	525486002	BRACKET -	1	-
27	525485801	CHUTE -	1	-
28	580942701	V-RING -	3	-
29	580942301	SPACER -	3	-
30	525465601	SPACER	1	-

Ref.	Article N.	Description	Qty	Kit
		-		
31	574196401	TUBE -	2	-
32	574196501	TUBE -	1	-
33	580942601	SEAL -	6	-
34	539990209	SCREW -	8	-
35	539101686	SCREW -	1	-
36	539130315	BOLT -	9	-
37	574210601	SCREW -	18	-
38	525612801	SCREW -	2	-
39	539131781	BOLT -	2	-
40	874490512	BOLT -	3	-
41	539115620	1/4-20X3/4 CARR BLT -	4	-
42	539128101	BOLT -	1	-
43	574202001	BOLT -	1	-
44	539119007	SCREW -	3	-
45	539107271	SCREW -	1	-
46	510022401	BOLT -	1	-
47	510022301	SCREW -	3	-
48	539102933	SCREW -	3	-
49	539100472	SCREW -	2	-
50	521991101	NUT -	4	-
51	539130653	NUT -	3	-

Ref.	Article N.	Description	Qty	Kit
52	539976978	NUT -	4	-
53	521996501	NUT -	4	-
54	539112899	NUT, 5/16-18, NYLOC -	9	-
55	810030500	WASHER -	8	-
56	539109600	WASHER -	9	-
57	539990692	WASHER -	10	-
58	522023401	WASHER -	1	-
59	539106504	WASHER -	3	-
60	522829301	BLADE *OPTIONAL*	3	-
61	574481301	BLADE *OPTIONAL*	3	-
62	522936601	BLADE *OPTIONAL*	3	-
63	539109755	BLADE *OPTIONAL*	3	-
1	510408502	PLATE -	1	-
2	510408602	PLATE -	1	-
3	525822201	PLATE -	2	-
4	510089801	ROD -	2	-
5	510407601	ROD -	1	-
6	510406301	BAR -	1	-
7	510410703	SHAFT -	2	-
8	510409602	SHAFT -	1	-
9	510023601	SHAFT -	4	-
10	510023902	BLOCK	4	-

Ref.	Article N.	Description	Qty	Kit
		-		
11	510412301	PIVOT -	2	-
12	510407201	LATCH -	1	-
13	510406801	LATCH -	1	-
14	510089401	BUSHING -	4	-
15	510089201	BUSHING -	2	-
16	539916561	MACHINE BUSHING -	1	-
17	510029201	SPRING -	2	-
18	510376601	SPRING -	1	-
19	510376701	SPRING -	1	-
20	510106501	STRUT -	2	-
21	510406601	LINK -	1	-
22	510083801	BALL JOINT -	1	-
23	510407501	SWIVEL -	1	-
24	510406401	SWIVEL -	1	-
25	510362501	SPACER -	4	-
26	510408401	SPACER -	1	-
27	525465501	HEIGHT ADJUSTER -	1	-
27	510022502	ARM -	1	-
28	510410002	ARM -	4	-
29	525465501	HEIGHT ADJUSTER -	3	-
29	510022501	ARM -	1	-

Ref.	Article N.	Description	Qty	Kit
30	539102641	CHAIN -	4	-
31	510089501	PAD -	1	-
32	510406701	GUIDE -	1	-
33	510408301	PEDAL -	1	-
34	510407801	PEDAL -	1	-
35	510406501	CAP -	1	-
36	510090101	PIN -	8	-
37	510016501	PIN -	1	-
38	515988201	PIN -	2	-
39	539120993	EYE BOLT -	2	-
40	525822501	KEY -	4	-
41	539105069	RETAINER RING -	4	-
42	539990870	RING -	1	-
43	522705201	RING -	4	-
44	539101949	RETAINER RING -	2	-
45	539102454	RETAINER RING -	3	-
46	539912730	RING -	1	-
47	539990208	SCREW -	2	-
48	539122728	BOLT -	1	-
49	525828901	BOLT -	2	-
50	525465701	BOLT -	4	-
51	525822101	BOLT	4	-

Ref.	Article N.	Description	Qty	Kit
		-		
52	525612801	SCREW -	2	-
53	525829001	BOLT -	2	-
54	525465401	SCREW -	1	-
55	510408201	BOLT -	1	-
56	516035501	BOLT -	1	-
57	522705601	SCREW -	1	-
58	521996501	NUT -	4	-
59	539991112	NUT -	1	-
60	521991101	NUT -	3	-
61	525829101	NUT -	2	-
62	539990625	NUT -	4	-
63	539108677	NUT 3/4-10 HEX ZD -	2	-
64	539112899	NUT, 5/16-18, NYLOC -	8	-
65	539108732	NUT 3/8-24 HEX JAM ZD -	1	-
66	539990122	WASHER -	1	-
1	574805202	MOTOR *RT*	1	-
2	574805201	MOTOR *LT*	1	-
3	525851201	SHAFT	1	-
4	510025901	ARM	1	-
5	515980002	LEVER	1	-
6	539976526	HANDLE	1	-
7	539133047	CALIPER	2	-
8	525851601	PLATE	2	-
9	525851401	SWIVEL	1	-

Ref.	Article N.	Description	Qty	Kit
10	515980301	LINK	1	-
11	539113952	SPRING	1	-
12	525848701	HUB	2	-
13	539977465	BRACKET	1	-
14	539132161	BLADE BUSHING	6	-
15	510089201	BUSHING	2	-
16	539110631	5/16 DIA ROLL PIN	1	-
17	522705901	PIN	1	-
18	539102889	SPLIT PIN	2	-
19	872140610	BOLT	3	-
20	539923463	HCS 3/8-16 X 3-1/4 GR5 ZD	1	-
21	539104984	SCREW	1	-
22	516035501	BOLT	4	-
23	539108732	NUT 3/8-24 HEX JAM ZD	3	-
24	539115617	NUT	1	-
25	521996501	NUT	1	-
26	539200282	NUT	9	-
27	521991101	NUT	8	-
28	819131316	WASHER	1	-
29	525490901	WASHER	2	-
30	539912063	WASHER	1	-
31	539133007	WASHER	2	-
1	501552801	SEAT -	1	-
2	510039302	PAN -	1	-
3	539119741	SWITCH -	1	-
4	539130359	BELT -	1	-
5	510064101	ROD -	1	-
6	585857402	BRACKET -	1	-
7	520283101	SPRING -	1	-
8	510283801	BUMPER -	2	-
9	539913847	BOLT -	2	-

Ref.	Article N.	Description	Qty	Kit
10	539113226	BOLT -	4	-
11	515990601	BOLT -	2	-
12	525834201	SCREW -	2	-
13	521996501	NUT -	4	-
14	539112899	NUT, 5/16-18, NYLOC -	6	-
1	516020301	DAMPER -	2	-
2	525447901	STRUT -	1	-
3	539113792	SWITCH -	1	-
4	532109553	SWITCH -	2	-
5	539131518	BEARING -	4	-
6	586737202	BRACKET -	2	-
7	501741101	BRACKET -	2	-
8	574269401	LEVER -	2	-
9	577042403	SERVICE KIT -	1	-
10	577042303	SERVICE KIT -	1	-
11	576140302	LEVER -	2	-
12	539109149	CONNECTOR -	4	-
12	539112899	NUT, 5/16-18, NYLOC -	6	-
13	539102590	BALL JOINT -	4	-
14	539102845	SPRING -	1	-
15	539020035	SPRING -	1	-
16	576850301	SPRING	1	-

Ref.	Article N.	Description	Qty	Kit
		-		
17	577252401	SPACER -	2	-
18	511594901	BUSHING -	1	-
19	511595001	LINK -	1	-
20	539110607	STUD -	2	-
21	539130894	GRIP -	2	-
22	575811501	BUMPER -	2	-
23	539131799	KNOB -	1	-
24	522559201	LINKAGE -	2	-
25	522842801	LINKAGE -	2	-
26	581437501	BLOCK -	2	-
27	581223001	PLATE -	2	-
28	539976988	PIN -	4	-
29	539104763	CLIP -	4	-
30	872110406	BOLT -	1	-
31	539990316	BOLT -	2	-
32	525544001	BOLT -	4	-
33	874780844	BOLT -	2	-
34	525612801	SCREW -	4	-
35	874780520	BOLT -	1	-
36	874490512	BOLT -	4	-
37	576850402	SCREW -	2	-

Ref.	Article N.	Description	Qty	Kit
38	574822701	SCREW -	6	-
39	539112899	NUT, 5/16-18, NYLOC -	1	-
40	539990223	NUT -	4	-
41	539108120	NUT -	4	-
42	539108010	NUT -	2	-
43	539913847	BOLT -	2	-
44	539990717	NUT -	2	-
46	539108732	NUT 3/8-24 HEX JAM ZD -	4	-
47	539990187	WASHER -	2	-
48	819131316	WASHER -	4	-
49	539990692	WASHER -	4	-
50	539127046	NUT -	1	-
50	819111116	WASHER -	4	-
1	510154601	TIRE -	2	-
2	510154501	TIRE -	2	-
3	539105152	TIRE -	2	-
4	510154502	WHEEL RIM -	2	-
5	525611902	FORK -	2	-
6	539105518	SPACER -	4	-
7	510034301	SEAL -	2	-
8	510034403	BEARING -	4	-
9	539101474	NIPPLE	2	-

Ref.	Article N.	Description	Qty	Kit
		-		
10	510034001	CAP -	2	-
11	539105517	BOLT -	2	-
12	521991101	NUT -	2	-
13	522842601	NUT -	2	-
14	539101173	NUT -	8	-
15	539990250	WASHER -	2	-
16	574824701	WASHER -	2	-
18	539105521	WHEEL ASSY *PNEUMATIC*	2	-
1	510246602	DECAL *CONSOLE*	1	-
2	516038101	DECAL *HEIGHT*	1	-
3	525349701	DECAL *HEIGHT*	1	-
4	532424102	DECAL *SPARK ARRESTOR*	1	-
5	532428676	DECAL *CROWN H SM*	1	-
6	532429196	DECAL *HUSQVARNA*	2	-
7	589283001	DECAL *MOTION CONTROL*	2	-
8	539105744	DECAL *BELT DRIVE WARN*	1	-
9	539105745	DECAL *BATTERY WARNING*	1	-
10	539105746	DECAL *SEVERING*	1	-
11	539107959	DECAL *WARNING*	1	-
12	585142601	DECAL *TRACKING*	2	-
13	585148801	DECAL *PARK BRAKE*	1	-

Ref.	Article N.	Description	Qty	Kit
14	574437301	DECAL *BELT ROUTE*	1	-
15	574455001	DECAL *CROWN LG*	1	-
16	574569401	DECAL *FUSE*	1	-
17	574569002	DECAL *ROPS WARNING*	1	-
18	574569006	DECAL *ROPS*	1	-
19	574825901	DECAL *SERVICE*	1	-
20	577150101	DECAL *FUEL VALVE*	1	-
21	581384401	DECAL *PZ 60*	1	-
22	581724301	DECAL *NO STEP*	2	-
23	581724401	DECAL *DEFLECTOR*	1	-
24	584904601	DECAL *BLADE WARNING*	1	-
25	539101881	DECAL *EXHAUST WARNING*	1	-